Guidance on Planning for Integration of Functional Needs Support Services in General Population Shelters

FEMA

This guidance was created for FEMA by
BCFS Health and Human Services, San Antonio, Texas; www.bcfs.net; 1-800-830-2246

Guidance on Planning for Integration of Functional Needs Support Services in General Population Shelters

Contents

Page	Section
7	1. Purpose
7	2. Disclaimer
8	3. Scope
8	3.1. Definition
8	3.2. FNSS Planning
9	3.3. Premise
10	3.4. Legal Foundation for FNSS Guidance
12	3.5. Legal Authorities and References
13	4. FNSS Guidance
15	4.1. Key Considerations in Planning for Shelter Set-Up
15	4.1.1. Planning in Advance for FNSS
16	4.1.2. Stakeholder Coordination
17	4.1.3. Planning Shelter Capacity
17	4.1.4. Identifying Shelter Sites/Facilities
18	4.1.5. Evaluating the Shelter

18 4.1.6. Selecting the Shelter
19 4.1.7. Equipping and Supplying the Shelter
21 4.1.8. Locating Services
23 4.1.9. Staffing the Shelter
24 4.1.10. Assessment Teams
25 4.1.11. Shelter Layout
25 4.1.12. Shelter Intake

27 4.2. Key Considerations in Planning for Shelter Operations
28 4.2.1. Dietary
28 4.2.2. Service Animals
30 4.2.3. Communication
31 4.2.4. Bathing and Toileting Needs
32 4.2.5. Quiet Area
32 4.2.6. Mental Health Services
32 4.2.7. Medical and Dental Services
34 4.2.8. Medication
35 4.2.9. Transportation Services

37 4.3. Key Considerations in Planning for Transition/Recovery
37 4.3.1. Transitioning Back to the Community
38 4.3.2. Closing the Shelter

40 5. Acronyms

41 6. Glossary

44 7. Operational Tools

45 8. Appendices

Acknowledgements

FNSS Review Panel Members that helped direct and define this guidance document

FEMA

- Mass Care Section
- Office of Disabilities Integration and Coordination
- Volunteer Agency Liaison
- Faith Based Office
- Office of Chief Council
- Region I
- Region VI
- Region X

HHS

- ESF 8 Office of the Assistant Secretary for Preparedness and Response ASPR
- ESF 6 Administration for Children and Families

DHS

- Office for Civil Rights and Civil Liberties

DOJ

- Disability Rights Section, Civil Rights Division

American Red Cross

- Direct Services
- Mass Care
- Disaster Health Services

National Council on Disabilities

National Council on Independent Living

National Disability Rights Network

Center for Disability and Health Policy

Rhode Island Department of Health

- Center for Emergency Preparedness & Response (CEPR)

Florida Statewide Disability Coordinator, Division of Emergency Management

California Emergency Management, CALEMA

Functional Needs Support Services

Guidance on Planning for Integration of Functional Needs Support Services in General Population Shelters

1. Purpose

The purpose of this document is to provide planning guidance that can be incorporated into existing shelter plans to State emergency managers and shelter planners to meet access and functional needs in general population shelters. This document provides guidance to assist emergency managers and shelter planners in understanding the requirements related to sheltering children and adults with functional support needs in general population shelters. Functional Needs Support Services (FNSS) and the guidance provided are designed to assist in the planning and resourcing of sheltering operations whether government, NGO, faith- or private-based to meet the access and functional needs of children and adults. These guidelines identify methods of achieving a lawful and equitable program through the delivery of FNSS for children and adults.

2. Disclaimer

This guidance is not designed to establish local government as the single shelter operator or establish a new "tier" of sheltering. It is not intended to establish new legal obligations, alter existing obligations, or constitute a legal interpretation of the statutes that are the basis of the guidance materials. The guidance is not meant to duplicate or cover all requirements found in existing or potential shelter plans or SOP's. This is simply a resource for integrating FNSS into the general shelter planning process and/or existing documents. Listing an agency or organization's processes/procedures as an operational tool in this guidance does not constitute a recommendation or endorsement of the resource. In addition, information presented in an operational tool may have been summarized, modified and/or combined with other cited sources.

3. Scope

This guidance has been developed to support local, tribal, State and Federal governments to integrate children and adults with and without disabilities who have access and functional needs into every aspect of emergency shelter planning and response. It is intended to be used in conjunction with general population shelter Standard Operating Procedures (SOP) to ensure that all shelter residents benefit equally from programs, services, and activities. It provides a context for FNSS integration in light of other existing plans and describes a process to use in any planning effort. These guidelines are scalable and can be applied to urban, suburban, and rural localities with multiple or limited resources.

Children and adults with disabilities have the same right to services in general population shelters as other residents. Emergency managers and shelter planners have the responsibility of planning to ensure that sheltering services and facilities are accessible. The decisions made in the planning process determine whether integration or segregation occurs during response. Although the FNSS guidance is geared toward emergency managers and shelter planners, it is a document that can be utilized as a shelter planning tool in local communities.

Throughout this document "State" is used to refer to a U.S. State, tribal government, U.S. territory and the District of Columbia.

3.1. Definition

Functional Needs Support Services (FNSS) are defined as services that enable individuals to maintain their independence in a general population shelter. FNSS includes:

- reasonable modification to policies, practices, and procedures
- durable medical equipment (DME)
- consumable medical supplies (CMS)
- personal assistance services (PAS)
- other goods and services as needed

Children and adults requiring FNSS may have physical, sensory, mental health, and cognitive and/or intellectual disabilities affecting their ability to function independently without assistance.

Others that may benefit from FNSS include women in late stages of pregnancy, elders, and people needing bariatric equipment.

3.2. FNSS Planning

Planning for FNSS in general population shelters includes the development of mechanisms that address the needs of children and adults in areas such as:

- Communication assistance and services when completing the shelter registration process and other forms or processes involved in applying for emergency-related benefits and services including Federal, State, tribal, and local benefits and services
- DME, CMS, and/or PAS that assist with activities of daily living
- Access to medications to maintain health, mental health, and function
- Available sleeping accommodations (e.g., the provision of universal/accessible cots or beds and cribs; the placement, modification, or stabilization of cots or beds and cribs; the provision and installation of privacy curtains)
- Access to orientation and way-finding for people who are blind or have low vision

- Assistance for individuals with cognitive and intellectual disabilities
- Auxiliary aids and services necessary to ensure effective communication for persons with communication disabilities
- Access to an air-conditioned and/or heated environment (e.g. for those who cannot regulate body temperature)
- Refrigeration for medications
- Availability of food and beverages appropriate for individuals with dietary restrictions (e.g., persons with diabetes or severe allergies to foods such as peanuts, dairy products and gluten)
- Providing food and supplies for service animals (e.g., dishes for food and water, arrangements for the hygienic disposal of waste; and, if requested, portable kennels for containment)
- Access to transportation for individuals who may require a wheelchair-accessible vehicle, individualized assistance, and the transportation of equipment required in a shelter because of a disability
- Assistance locating, securing, and moving to post-disaster alternative housing, which includes housing that is accommodating to the individual's functional support needs (e.g., accessible housing; housing with adequate space to accommodate DME; or housing located in close proximity to public transportation, medical providers, job or educational facility, and/or retail stores)
- Assistance with activities of daily living such as:
    - eating
    - taking medication
    - dressing and undressing
    - transferring to and from a wheelchair or other mobility aid
    - walking
    - stabilization
    - bathing
    - toileting
    - communicating

3.3. Premise

Historically, resource gaps have existed in planning for and meeting access and functional needs in general population shelters. Many times this has resulted in disparate treatment and the denial of full and equal services. The intent of this planning guidance is to ensure that individuals are not turned away from general population shelters and inappropriately placed in other environments (e.g., "special needs" shelters, institutions, nursing homes, and hotels and motels disconnected from other support services). Addressing these gaps benefits the entire community and maximizes resources.

3.4. Legal Foundation for FNSS Guidance

The Stafford Act and Post-Katrina Emergency Management Reform Act (PKEMRA), along with Federal civil rights laws, mandate integration and equal opportunity for people with disabilities in general population shelters.

To comply with Federal law, those involved in emergency management and shelter planning should understand the concepts of accessibility and nondiscrimination and how they apply in emergencies. The following are key nondiscrimination concepts applicable under Federal laws, and examples of how these concepts apply to all phases of emergency management.

1. Self-Determination – People with disabilities are the most knowledgeable about their own needs.
2. No "One-Size-Fits-All" – People with disabilities do not all require the same assistance and do not all have the same needs.
   - Many different types of disabilities affect people in different ways. Preparations should be made for people with a variety of functional needs, including people who use mobility aids, require medication or portable medical equipment, use service animals, need information in alternate formats, or rely on a caregiver.
3. Equal Opportunity – People with disabilities must have the same opportunities to benefit from emergency programs, services, and activities as people without disabilities.
   - Emergency recovery services and programs should be designed to provide equivalent choices for people with disabilities as they do for people without disabilities. This includes choices relating to short-term housing or other short- and long-term disaster support services.
4. Inclusion – People with disabilities have the right to participate in and receive the benefits of emergency programs, services, and activities provided by governments, private businesses, and nonprofit organizations.
   - Inclusion of people with various types of disabilities in planning, training, and evaluation of programs and services will ensure that all people are given appropriate consideration during emergencies.
5. Integration – Emergency programs, services, and activities typically must be provided in an integrated setting.
   - The provision of services such as sheltering, information intake for disaster services, and short-term housing in integrated settings keeps people connected to their support system and caregivers and avoids the need for disparate services facilities.
6. Physical Access – Emergency programs, services, and activities must be provided at locations that all people can access, including people with disabilities.
   - People with disabilities should be able to enter and use emergency facilities and access the programs, services, and activities that are provided. Facilities typically required to be accessible include: parking, drop-off areas, entrances and exits, security screening areas, toilet rooms, bathing facilities, sleeping areas, dining facilities, areas where medical care or human services are provided, and paths of travel to and from and between these areas.
7. Equal Access – People with disabilities must be able to access and benefit from emergency programs, services, and activities equal to the general population.
   - Equal access applies to emergency preparedness, notification of emergencies, evacuation, transportation, communication, shelter, distribution of supplies, food, first aid, medical care, housing, and application for and distribution of benefits.

8. Effective Communication – People with disabilities must be given information that is comparable in content and detail to that given to the general public. It must also be accessible, understandable and timely.
    - Auxiliary aids and services may be needed to ensure effective communication. These resources may include pen and paper; sign language interpreters through on-site or video; and interpretation aids for people who are deaf, deaf-blind, hard of hearing or have speech impairments. People who are blind, deaf-blind, have low vision, or have cognitive disabilities may need large print information or people to assist with reading and filling out forms.
9. Program Modifications – People with disabilities must have equal access to emergency programs and services, which may entail modifications to rules, policies, practices, and procedures.
    - Service staff may need to change the way questions are asked, provide reader assistance to complete forms, or provide assistance in a more accessible location.
10. No Charge – People with disabilities may not be charged to cover the costs of measures necessary to ensure equal access and nondiscriminatory treatment.
    - Examples of accommodations provided without charge to the individual may include ramps; cots modified to address disability-related needs; a visual alarm; grab bars; additional storage space for medical equipment; lowered counters or shelves; Braille and raised letter signage; a sign language interpreter; a message board; assistance in completing forms or documents in Braille, large print or audio recording.

See FEMA: IV. Non-discrimination Principles of the Law; http://www.fema.gov/oer/reference/principles.shtm

The Americans with Disabilities Act of 1990 (ADA), the Rehabilitation Act of 1973 (RA), and the Fair Housing Act (FHA), their regulations and agency guidance, as well as State counterparts, among others, define the scope of FNSS. These hallmarks of equal opportunity for people with disabilities include:

- The implementation and execution of a general policy of nondiscrimination on the basis of disability
- Sheltering persons with disabilities in the most integrated setting appropriate to the needs of the person, which in most cases is the same setting people without disabilities enjoy
- Reasonable modifications of policies, practices, and procedures to ensure nondiscrimination, with reasonableness judged in light of nondiscrimination principles applied in emergent circumstances
- The provision of auxiliary aids and services to ensure effective communication, with primary consideration of the aid or service given to the person with a disability
- Elimination of eligibility criteria, discriminatory administrative methods, paternalistic safety requirements, and surcharges where discrimination results
- The selection of accessible sites for the location of general population emergency shelters, the construction of architecturally compliant mass care shelters and elements, and required physical modifications to ensure program accessibility in existing facilities

3.5. Legal Authorities and References

ADA Best Practices Tool Kit for State and Local Governments, Chapter 7, Emergency Management under Title II of the ADA (2007), Addenda 1-3, and the Introduction to Appendices 1 and 2 (Attached as Exhibit 1); Titles II, III, and V of the Americans with Disabilities Act of 1990, 42 U.S.C. §§ 12101-12103, 12131-12134, 12181-12188, and 12201-12213, as amended by the ADA Amendments Act of 2008. Nondiscrimination on the Basis of Disability in State and Local Government Services, 28 C.F.R. pt. 35. Nondiscrimination on the Basis of Disability by Public Accommodations and in Commercial Facilities, 28 C.F.R. pt. 36. The Americans with Disabilities Act Title II Technical Assistance Manual (1993) and Supplement (1994). The Americans with Disabilities Act Title III Technical Assistance Manual (1993) and Supplement (1994).

Section 504 of the Rehabilitation Act of 1973, 29 U.S.C. §§ 794, as amended. Enforcement of Nondiscrimination on the Basis of Handicap in Programs or Activities Conducted by the Federal Emergency Management Agency, 44 C.F.R. pt. 16. Enforcement of Nondiscrimination on the Basis of Handicap in Programs or Activities Conducted by the Department of Justice, 28 C.F.R. pt. 39. Nondiscrimination on the Basis of Handicap in Programs or Activities Receiving Federal Financial Assistance, 45 C.F.R. pt. 84 (Department of Health and Human Services). Nondiscrimination on the Basis of Handicap in Programs or Activities Receiving Federal Financial Assistance, 34 C.F.R. pt. 104 (Department of Education). Nondiscrimination Based on Handicap in Federally Assisted Programs and Activities of the Department of Housing and Urban Development, 24 C.F.R. pt. 8.

Title VIII of the Civil Rights Act of 1968 ("Fair Housing Act"), as amended, 42 U.S.C. §§ 3601-3631. Discriminatory Conduct Under the Fair Housing Act, 24 C.F.R. pt. 100.

The Architectural Barriers Act of 1968, as amended, 42 U.S.C. §§ 4151-4157. Construction and Alteration of Public Buildings, 41 C.F.R. pt. 101-19.

The Homeland Security Act of 2002, 6 U.S.C. §§ 101-557, as amended.

The Robert T. Stafford Disaster Relief and Emergency Assistance Act, 42 U.S.C. §§ 5121-5206, as amended. Federal Disaster Assistance, 44 C.F.R. pt. 206.

The Post-Katrina Emergency Management Reform Act, 6 U.S.C. § 761(d), as amended.

Emergency managers and shelter planners are encouraged to investigate their applicable State laws.

4. FNSS Guidance

This document outlines common scenarios that general population shelter planners and operators may encounter during emergencies and disasters, and presents guidance on providing an integrated, non-dependent, nondiscriminatory environment, so people with and without disabilities may benefit from the same sheltering program.

The operational tools in this document are excerpts and examples taken from various agency and jurisdictional documents throughout the United States. While they are not meant to dictate a State's policies or procedures, they do present ideas and practices that can be adapted to fit each State's specific needs.

4.1. Key Considerations In Planning For Shelter Set-Up

4.1.1. Planning in Advance for FNSS

The importance of advanced planning in developing and implementing FNSS in general population shelters cannot be overstated. Throughout the document this principle will be repeated again and again to emphasize that FNSS cannot wait to be identified and put into place once an emergency or disaster occurs.

Often, it is assumed that during a disaster, children and adults requiring FNSS must be housed in a medical special needs shelter. Children and adults with access and functional needs do not necessarily have medical conditions and typically do not require the care that medical shelters provide. Diverting to medical shelters can result in the separation of individuals with disabilities from those associated with them such as family, friends, neighbors and caregivers. In addition, inappropriate placement can jeopardize the health and safety of the entire community by creating unnecessary surges on emergency medical resources.

A one-size-fits-all approach to shelter planning does not work. (See FEMA: IV.Non-discrimination Principles of the Law; http://www.fema.gov/oer/reference/principles.shtm).

Under the Americans with Disabilities Act (ADA), children and adults with disabilities are entitled to equal opportunity to participate in programs, services, and activities in the most integrated setting.

Historically, shelter facilities may not have met requirements under the Standards for Accessible Design, 28 CFR Part 36 (adopted from ADA Architectural Guidelines). Newly constructed or recently altered facilities are more likely to fully comply with standards for accessible design. The decision to open a shelter that violates Federal laws and ADA standards brings with it significant challenges to appropriately and safely shelter children and adults with and without disabilities who have access and functional needs.

State, tribal and local governments are responsible for maintaining plans to support emergency response. Emergency managers and shelter planners should incorporate the planning considerations addressed in this guidance into their existing plans.

Operational Tool #1 Planning Guidance	
Comprehensive Preparedness Guide 101 A Guide for All-Hazard Emergency Operations Planning	The FEMA Comprehensive Preparedness Guide, CPG 101 provides general guidelines on developing Emergency Operations Plans (EOPs). It promotes a common understanding of the fundamentals of planning and decision making to help emergency planners examine a hazard and produce integrated, coordinated, and synchronized plans. This guide helps emergency managers in State, territorial, local, and tribal governments in their efforts to develop and maintain a viable all-hazard EOP.
Source	http://www.fema.gov/about/divisions/cpg.shtm

4.1.2. Stakeholder Coordination

All levels of government, working closely with the private sector, share the responsibility of providing emergency shelter care to children and adults who need assistance. All citizens expect their State and local governments to keep them informed and to provide assistance in the event of an emergency or disaster.

In developing plans that will meet the needs of people requiring FNSS, emergency managers and shelter planners should collaborate with all relevant stakeholders including:

- People requiring FNSS
- Agencies and organizations that provide FNSS
- Agencies and organizations that advocate for the rights of people requiring FNSS
- DME, CMS, PAS, and communication providers

Emergency managers and shelter planners can obtain assistance in identifying stakeholders by accessing www.disability.gov.

The operation tools in this document are excerpts and examples taken from various agency and jurisdictional documents throughout the United States. While they are not meant to dictate a State's policies or procedures, they do present ideas and practices that can be adapted to fit each State's specific needs.

Operational Tool #2 Stakeholder Coordination	
Sample State Guidance to Address Functional Needs	The New Hampshire Functional Needs Guidance includes the names and contact information for direct service providers and advocacy organizations that work with functional needs populations, such as faith-based organizations, home-healthcare providers, Meals on Wheels, etc. In addition, the document suggests that the State and local agencies that may be of assistance include the: Developmental Disabilities Council, Area Agencies, Governor's Commission on Disability, Granite State Independent Living, Northeast Deaf and Hard of Hearing Services, NH Association for the Blind, NH Brain Injury Foundation, Community Action Programs, Community Mental Health Centers and NH Office of Minority Health.
Source	New Hampshire Functional Needs Guidance – Support Document to the State Emergency Operations Plan http://www.nh.gov/safety/divisions/hsem/stateemergplan/index.html

4.1.3. Planning Shelter Capacity

When anticipating and planning for shelter capacity, emergency managers and shelter planners should:

- Be familiar with and committed to meeting ADA requirements for general population care shelters
- Know the demographic profile of their community and understand the type of assistance that may be required by various populations during an emergency or disaster
- Establish a rigorous public education program with an emphasis on personal preparedness. (The program should include information in accessible formats and languages to reach the entire community)
- Collaborate with stakeholders (see section above on Stakeholder Coordination)
- Ensure that emergency plans are a "living document" and are updated with a predetermined frequency, as well as after any major event
- Establish mutual-aid agreements and memorandums of understanding with neighboring communities that can provide additional emergency resources in the event that local shelters are destroyed or damaged

Operational Tool #3 Planning Shelter Capacity	
Sample of Available Information Regarding the Estimated Number of Children and Adults in Texas who have a Disability or have Difficulty Performing Self-care Activities	In Texas, there are an estimated 2,962,000 people, age 5 and older, who have a disability. Texas also has an estimated 579,000 people, age 5 and older, who have difficulty performing self-care activities. This website presents the disability prevalence data by State or the entire U.S. and is broken down by disability type, age, gender, race, ethnicity, family income, benefit recipiency, employment, and living arrangement.
Source	Center for Personal Assistance Services, University of California, San Francisco, California http://www.pascenter.org Note: Click on Need for PAS, click on Disability Prevalence Data from the Current Population Survey (2008-2009)

4.1.4. Identifying Shelter Sites/Facilities

Federal and State laws require that children and adults with disabilities have equal opportunity to access emergency programs and services. An assumption might be made that if a building is designated as a shelter, it will meet the needs of all individuals as long as it provides a safe place to eat, sleep, and take care of personal hygiene needs. However, without modifications, some shelters are not appropriate to support the integration of FNSS. Emergency managers and shelter planners should ensure that all general population shelters meet ADA requirements, including the standards for accessible design and State accessibility codes.

Operational Tool #4 Locating the Shelter	
Priority Site Selection	Facilities that have been built or altered since 1992 are more likely to comply with the architectural requirements of the ADA
Source	ADA Best Practices Toolkit Chapter 7, ADA Checklist for Emergency Shelters www.ada.gov/pcatoolkit/chap7shelterchk.pdf

4.1.5. Evaluating the Shelter

Individuals who have the responsibility of selecting shelter sites are often not trained in what constitutes an accessible facility. They need information to assist them in evaluating a building to determine if it is accessible or can be made accessible expeditiously with few modifications and minimal expense. There are individuals in nearly every community who have experience in evaluating accessibility (e.g., ADA Consultants, ADA accessibility inspectors, disability-related organizations).

Preliminary analysis of each potential shelter will expedite the elimination of any building with extensive barriers.

Operational Tool #5 Evaluating the Shelter-Site Selection Tool	
ADA Checklist for Emergency Shelters	Shelters need accessible: • Entrances • Routes to all services/activity areas • Routes within toilet rooms • Passenger drop off and pick up areas • Parking • Sidewalks and walkways • Shelter entrances, hallways, and corridors • Check in/information areas • Sleeping areas • Restrooms, showers, and toilet stalls, including portable toilets • Public telephones • Drinking fountains • Eating areas • Medical first aid areas • Recreation areas The checklist provides instructions on taking measurements of the shelter.
Source	www.ada.gov/pcatoolkit/chap7shelterchk.pdf; ADA Checklist for Emergency Shelters; Appendix 1

4.1.6. Selecting the Shelter

State codes and standards must, at a minimum, meet the Federal requirements, but can be more comprehensive. The ADA and other Federal laws, including the Stafford Act, the Rehabilitation Act, the Fair Housing Act, and the Architectural Barriers Act, provide affirmative obligations and prohibitions of discrimination on the basis of disability. No State or local government, or its contractors, may, by law, policy, or contract, provide services below those standards without violating Federal law. This does not mean that a State or local government cannot enact laws and ordinances or provide services, obligations, and prohibitions that extend beyond these standards to ensure greater access. A common example would be to provide twice as many as the required number of accessible parking spaces and access aisles.

Since most States and communities have additional codes and standards related to accessibility, emergency managers and shelter planners should be sure to identify and comply with these requirements as well.

If selected as an emergency shelter, a facility with inaccessible features must be made accessible before use as a shelter (reference Operational Tools #4 and #5 and Appendix 1).

Plans should include strategies to provide power for services that require a back-up power system in an emergency or disaster. It is important to determine if a facility has a source of emergency power generation.

Operational Tool #6 Florida Shelter Selection Checklist	
Checklist for Emergency Shelters	Checklist for emergency shelters reflecting Florida code
Source	Americans with Disabilities Act/Florida Accessibility Code Statewide Disability Coordinator Telephone : 850-413-9892 http://www.floridadisaster.org/documents/ada/emergencyshelterchecklistflorida.pdf

Operational Tool #7 San Jose California Shelter Assessment Checklist	
Checklist for Assessing Emergency Shelters	San Jose California tool for assessing an emergency shelter
Source	San Jose Office of Emergency Services http://www.sanjoseca.gov/emergencyservices Note: Click on San Jose Disaster Shelter Annex for Vulnerable Populations, click on Annex D

4.1.7. Equipping and Supplying the Shelter

Post-Katrina Emergency Management Reform Act (PKEMRA) requires that children and adults with and without disabilities who have access and functional needs must be able to access the same programs and services as the general population.

Despite best efforts and advance planning, some persons will arrive at the shelter without the durable medical equipment (DME) and/or medications they require.

Prior to an emergency or disaster, emergency managers and shelter planners should:

- Include in the State plan a process for locating, purchasing, and storing as much of the supplies and equipment as possible and practical to meet the needs of children and adults with and without disabilities who have access and functional needs
- Develop provider agreements with the private sector to ensure that necessary equipment and supplies that have not been purchased and stored will be available during an emergency or disaster
- Develop agreements with area contractors to maintain equipment (e.g., generators, oxygen concentrators)

Emergency managers and shelter planners should include in the planning process people with expertise and experience in dealing with the logistical requirements of providing the resources necessary to set up and operate a general population shelter that includes children and adults with and without disabilities who have access or functional needs.

Operational Tool #8 Durable Medical Equipment (DME) List	
DME (for children and adults)	Sample DME list
Source	FEMA: Durable Medical Supply Sample List; Appendix 3

Operational Tool #9 Consumable Medical Supplies (CMS) List	
CMS (for children and adults)	Sample list of Consumable Medical Supplies using a planning estimate based on 100 person shelter population for one week
Source	FEMA: Consumable Medical Supply Sample List; Appendix 4

Operational Tool #10 Communication Devices	
Communication Devices (not inclusive)	• Hearing aids • TTY/TDD Phones • Cap Tel Phones (for captioning) • Computer Assisted Real time Translation • Hearing aid batteries of different sizes (including batteries for cochlear implants • Synthesizers used with PCs for text-to-speech • Screen Readers • Screen Magnification Programs • Scanning Systems for Low Vision Users
Source	Guidance on Planning and Responding to the Needs of People with Access and Functional Needs, California Emergency Management Agency, Office for Access and Functional Needs www.oes.ca.gov/ Click on Office for Access and Functional Needs
Source	BCFS; www.bcfs.net/fnssrecommendations

Operational Tool #11 Resources for Assistive Technology	
Reuse of Assistive Technology	There is at least one Federally-funded program in every State that engages in the reuse of assistive technology. These programs are also connected to other entities in the State that reuse assistive technology so they can serve as a central point of contact for emergency managers and shelter planners.
Source	http://www.resnaprojects.org/nattap/at/statecontacts.html (contact information only)
Source	http://www.resnaprojects.org/nattap/at/statecontacts.html#al (contact information)

Operational Tool #12 Legal Authority-DME, CMS, Communication Devices	
Legal Authority	Federal agencies may, on the direction of the President, provide assistance essential to meeting immediate threats to life and property resulting from a major disaster including: • Medicine, durable medical equipment, communication devices, goods, and other consumables • Emergency medical care, emergency mass care emergency shelter, and provision of food, water, medicine, durable medical equipment In any emergency, the President may: • Assist State and local governments in the distribution of medicine, food, and other consumable supplies, and emergency assistance Federal authority for provision of PAS can be found in the reference below.
Source	Sections 403 (a) (2) and (3) (B) and 502(a) (7) of the Robert T. Stafford Disaster Relief and Emergency Assistance Act, 42 U.S.C. §§ 5121-5206, as amended. Federal Disaster Assistance, 44 C.F.R. pt. 206. http://www.fema.gov/about/stafact.shtm

Many children and adults with and without disabilities who have access and functional needs depend on battery-powered wheelchairs and scooters for mobility. The batteries in these mobility aids must be recharged frequently or they will stop functioning. Without these mobility aids, individuals will lose their ability to move about, they may be unable to participate in some services offered by the shelter, and they may need to depend more heavily on assistance from caregivers.

4.1.8. Locating Services

State plans should include arrangements for services that are necessary to provide sufficiency of care in order to maintain level of function for children and adults with and without disabilities who have access and functional needs in a general population shelter. Emergency managers and shelter planners should arrange for services ahead of time through the use of provider agreements. The following are examples of some types of services that should be available in a general population shelter:

- Power Generation
  - Redundant source of power even in the event of a long-term power outage. Some facilities may have no source of emergency power generation, while others may have only a limited source. Emergency managers and shelter planners should take whatever steps are necessary to see that there is a plan for providing an alternate source of power in the event of an outage and mechanical service contracts/services for emergency repairs.
- Medical Providers
  - Physicians, Registered Nurses, Licensed Vocational Nurse, EMT's and Paramedics
  - Psychiatrists and Dental providers
  - Emergency veterinary service provider
  - Access to dialysis treatments (this includes providing access to transportation to and from the dialysis facility and a meal(s) if a resident is not at the shelter during meal time(s))
- Communications providers
  - Interpreters (Spanish, sign language, etc.)
  - Television with captioning
  - Information technology/computer services
  - TTY - TDD

    - Computer Assisted Real time Translation (CART)
    - Note taking
- Food service providers
    - Special diets
    - Caterer
- Transportation providers
    - Para transit services
    - Public transportation
- Shelter Maintenance providers
    - Service for accessible portable toilets, hand washing units, showers, etc.
    - Disposal of bio-hazard materials, such as needles in sharps containers
- DME providers
    - Oxygen providers
- CMS providers

Operational Tool #13 Locating Services	
Support Services	Staff and resources to: • Replace prescribed medications • Obtain DME and CMS • Assist persons in maintaining their usual level of independence (personal assistance with activities of daily living, older adult non-acute medical and chronic conditions, etc.) • Provide support to persons with intellectual, cognitive, and mental health conditions • Provide interpreters and/or other communication support to assist persons who require communication assistance deaf or hard of hearing and blind or low vision, speech disabilities, language/cultural differences • Provide assistance to individuals who have conditions that affect mobility • Provide assistance to children and adults with chronic but stable respiratory conditions (heart disease, asthma, emphysema, allergies, etc.) • Provide assistance to children and adults with temporary limitations (post-surgery, injuries, pregnancy, etc.) • Provide assistance to children and adults who require dialysis
Source	Guidance on Planning and Responding to the Needs of People with Access and Functional Needs, California Emergency Management Agency, Office for Access and Functional Needs www.oes.ca.gov/ Note: Click on Office for Access and Functional Needs
Source	BCFS; www.bcfs.net/fnssrecommendations

Operational Tool #14 Documenting Service Providers	
Service Provider Contact Information	Form used to document names, vendor number, addresses and telephone numbers of service providers including: Communications Providers • Interpreters (Spanish, sign language, etc.) • Television with captioning • Information Technology/Computer Services • TTY-TDD • Computer Assisted Real time Translation (CART) • Note taking Medical Staffing Services • On-site nursing services • Emergency medical services • Emergency dental services • Pharmaceutical services Resource Suppliers • O2 • Dialysis • Constant power source • Blood sugar monitoring Food Services • Special diets • Caterer Personal Assistance Services Transportation Services • Para transit Services • Public Transportation Service Animals • Emergency veterinary services Shelter Maintenance Services • Servicing of accessible portable toilets, hand washing units, etc. • Disposal of bio-hazard materials FNSS equipment • Durable Medical Equipment
Source	BCFS; www.bcfs.net/fnssrecommendations; FORM: Contact Information for Shelter Services Providers; Appendix 2

4.1.9. Staffing the Shelter

Emergency managers and shelter planners should integrate people with expertise regarding access and functional support needs into the staffing plan. Agencies in the stakeholder group are often a good resource for providing shelter staff with appropriate experience (reference section on Stakeholder Coordination).

Operational Tool #15 Staffing the Shelter	
Personal Assistance Services	Guidance for providing personal assistance service in general population shelters that include children and adults with access or functional needs
Source	BCFS; www.bcfs.net/fnssrecommendations in conjunction with FEMA; www.fema.gov; Guidance on Providing Personal Assistance Services; Appendix 5

4.1.10. Assessment Teams

Prior to a disaster or emergency, there should be a plan for the activation of a shelter assessment team to assess the needs of children and adults who have access or functional needs. An entity may want to develop a process to credential these teams. One example of a team is the California Functional Assessment Service Team (FAST) described below. The FAST training is a DHS-approved course.

Operational Tool #16 Assessment Teams	
Functional Assessment Service Team (FAST)	The FAST responds to the needs of people in a shelter who have access or functional needs. The purpose of the FAST program is to conduct assessments of people with these needs as they arrive at the general population shelters. The assessment evaluates the functional needs a person has and determines resources necessary to support these needs in the general population shelter. The FAST may be deployed as shelters are opened and remain in service until they are no longer needed. They can also transfer to another shelter as needed, or request to deploy to shelters as jurisdictions become aware of their existence during major events. FAST consists of trained government employees and personnel from community-based organizations and non-governmental organizations ready to respond and deploy to disaster areas to work in shelters. The FAST members should have extensive knowledge of the populations they serve, their needs and available services and resources including housing, benefit programs and disaster aid programs. They assist in meeting essential FNSS so people can maintain their usual level of independence during disasters and emergencies. FAST frees up other emergency resources to focus on emergency incidents rather than on mitigating complications. FAST planning includes: • Training teams • Establishing a Memorandum of Understanding with individuals or organizations that will participate in the FAST • Maintaining contacts at the State, tribal, regional, and local level
Source	Guidance on Planning and Responding to the Needs of People with Access and Functional Needs, California Emergency Management Agency, Office for Access and Functional Needs www.oes.ca.gov/ Note: Click on Office for Access and Functional Needs DHS approved FAST course (CA-049-REST) http://www.dss.cahwnet.gov/dis/PG1909.htm Homeland Security Grant Program and Emergency Management Program Grant funds can be used to implement this program (California Department of Social Services).

4.1.11. Shelter Layout

Cots and other furniture items are placed in such a way that routes are accessible to people who use wheelchairs, crutches, or walkers. Protruding objects in ANY area where people walk throughout the shelter should be eliminated. Accessible routes should connect the sleeping quarters to the food distribution and dining quarters, bathrooms, and activity areas (reference Chapter 7 Addendum 2: The ADA and Emergency Shelters: Access for All in Emergencies and Disasters).

Operational Tool #17 Shelter Layout	
Estimating Shelter Capacity	• 20 square feet per person should be available for short-term or evacuation shelters and up to 40 square feet per person for sheltering longer than 72 hours • People who use wheelchairs, lift equipment, a service animal, and personal assistance services can require up to 100 square feet
Source	Sheltering People with Disabilities, Draft Space and Layout Considerations Universal Access Committee, Feb, 2007 www.ct.gov/demhs/lib/demhs/space__layout_considerations.pdf

4.1.12. Shelter Intake

Individuals are not required to provide information about their disability or access or functional needs, but the opportunity to provide that information must be given. Emergency managers and shelter planners should include in their plans specific strategies for complying with the legal mandate that people with disabilities must be able to access the same programs and services as the general population. An individual request for an accommodation, based on disability, should be provided even if not requested during the initial intake.

4.2. Key Considerations In Planning For Shelter Operations

Segregating children and adults with and without disabilities who have access or functional needs and those with whom they are associated from general population shelters to "special needs" shelters is ineffective in achieving equitable program access and violates Federal law. People with disabilities are entitled by law to equal opportunity to participate in programs, services, and activities in the most integrated setting appropriate to the needs of the individual. Additionally, children and adults with and without disabilities who have access and functional needs should not be sheltered separately from their families, friends, and/or caregivers because services they require are not available to them in general population shelters.

4.2.1. Dietary

Plans should include provisions to ensure meals and snacks are provided to all shelter residents, including children and adults with specific dietary needs and restrictions (e.g., people with diabetes or severe allergies to common food ingredients and baby formulas). Plans should also include a process for responding quickly to unanticipated, but legitimate, dietary needs and restrictions that are identified when a resident is admitted to the shelter. It is critical that information about any special dietary needs or restrictions be obtained, documented, and communicated to the entity responsible for meal and snack preparation immediately. Food preparation may need to be adjusted (e.g., food may need to be pureed) to meet resident needs.

Operational Tool #18 Dietary-Agreement	
Resources for Meeting Dietary Needs	Develop a memorandum of agreement or contract with a local organization(s) that has demonstrated capacity to provide meals and snacks to large populations including: • Hospitals • Local restaurants or cafeterias • Schools • Non-profits with a feeding crew
Source	BCFS; www.bcfs.net/fnssrecommendations
Source	Multi Agency Feeding Plan; http://www.nvoad.org/images/stories/docs/Final%20 Multi-Agency%20Feeding%20Plan%20Template_April%202010.pdf

In order to meet all the needs of all people in the shelter, menus that are low sodium, low fat and low sugar should be developed for general population shelters and should include specific instructions regarding what to purchase in order to prepare each meal. Organizations contracting to prepare meals and snacks should also anticipate and be prepared to provide meals for persons with other dietary restrictions (e.g., vegetarian, gluten-free meals, kosher meals, meals for people who are allergic to peanut oil and by-products).

Operational Tool #19 Dietary-Menu	
One Day Menu for General Population Shelter	Menu for general population shelters, including modifications for persons who are diabetic, require reduced sodium, pureed diets and infants and children
Source	BCFS; www.bcfs.net/fnssrecommendations; One Day Menu for General Population Shelters Providing Functional Needs Support Services; Appendix 6

4.2.2. Service Animals

Under the ADA, a service animal is any animal that is individually trained to provide assistance to a person with a disability. Most people are familiar with dogs that guide people who are blind or have low vision, but there are many other functions that service animals perform for people with a variety of disabilities. Examples include alerting people who are deaf or hard of hearing to sounds; pulling wheelchairs; carrying or retrieving items for people with mobility disabilities or limited use of arms or hands; assisting people with disabilities to maintain their balance or stability; alerting people to, and protecting them during, medical events such as seizures; and working or performing tasks for

individuals with psychiatric, neurologic, or intellectual disabilities, such as waking up a person with depression, assisting a person with Alzheimer's in way-finding, retrieving misplaced objects for persons with traumatic brain injury, protecting a child with autism from self injury, or orienting an individual with schizophrenia to their environment.

Many emergency shelters do not allow residents or volunteers to bring their pets or other animals inside, but shelters must make exceptions to "no pets" or "no animals" policies to allow people with disabilities to be accompanied by their service animals. Service animals are not pets and are therefore not subject to restrictions applied to pets or other animals.

While dogs are the most common type of service animal, other types of animals can also be service animals. There are also no limitations on the size or breed of dogs that can be used as service animals.

Many service animals are easily identified because they wear special harnesses, capes, vests, scarves, or patches. Others can be identified because they accompany individuals with visible disabilities and the functions they perform can also be readily observed. When none of these identifiers are present, shelter staff may ask only two questions to determine if an animal is a service animal:

(1) "Is this a service animal required because of a disability?"
(2) "What work or tasks has the animal been trained to perform?"

If the answers to these questions reveal that the animal has been trained to work or perform tasks or services for a person with a disability, it qualifies as a service animal and must be allowed to accompany its owner anywhere other members of the public are allowed to go, including bathrooms, areas where food is served, and almost all areas where medical care is provided. Questions about the nature or severity of a person's disability or ability to function may not be asked. The ADA also does not permit shelter staff to question a person's need for a service animal or exclude a service animal on the grounds that shelter staff or volunteers can provide the assistance normally provided by the service animal. Under the ADA, shelter staff may not require a license, certification, ID tag, medical certificate, or any other type of documentation for a service animal.

Operational Tool #20 Service Animals Definition	
ADA Best Practices Tool Kit, Chapter 7 Addendum 1	The ADA and Emergency Shelters: Access for All in Emergencies and Disasters, pages 6-7
Source	http://www.ada.gov/pcatoolkit/chap7shelterprog.pdf

In addition to the requirements set out in the ADA, the shelter may be covered by the Fair Housing Act (FHA). The FHA affords individuals with disabilities the right to use service animals in housing. Plans should direct that, prior to an emergency or disaster, the following issues be addressed:

- Areas where animals can be housed, exercised, and toileted should be identified and communicated in alternative accessible formats in each general population shelter
- A reliable source for food and supplies (water bowls, leashes, collars) for the animals should be located and agreements be made to ensure that these items are available

4.2.3. Communication

Effective communication is essential during an emergency or disaster. Children and adults with and without disabilities who have access or functional needs should be given the same information provided to the general population using methods that are understandable and timely. The ADA states that a public entity shall take appropriate steps to ensure that communication with applicants, participants, and members of the public with disabilities are as effective as communication with others. Effective communication requirements also apply to private and non-profit entities providing sheltering services.

Plans should direct that, prior to an emergency or disaster, the auxiliary aids and services necessary to meet the communication needs of all persons in the shelter are identified and immediately available. Where possible, emergency managers and shelter planners should already have contracts and/or memorandums of agreement in place with the vendors who can provide these items and services.

Operational Tool #21 Communication-Strategies	
General	Assign volunteers ahead of time to provide one-on-one assistance to residents who need help in providing and receiving effective communication throughout the sheltering process (e.g., completing forms)
Blind and Low Vision	Provide Braille, large and high contrast print, audio recording, readers
Deaf or Hard of Hearing, Speech Disability	Provide qualified sign language or oral interpreter; augmentative communication device; post message in central location; have notepads, pens and pencils
Intellectual Disability	Present information slowly, use simple language and speak in short sentences
Source	FEMA: Accommodating Individuals with Disabilities in the Provision of Disaster Mass Care, Housing and Human Services http://www.fema.gov/oer/reference/index.shtm
Source	Chapter 7 Addendum 2: The ADA and Emergency Shelters: Access for All in Emergencies and Disasters http://www.ada.gov/pcatoolkit/chap7shelterprog.pdf

Operational Tool #22 Communication-Devices	
Communication Devices	All communication devices must be accessible to people with access or functional needs
Telephone	Access to teletypewriter (TTY or TDD or CapTel)
Television	Accessible captioning
Computers	Equipment and programs that make computers accessible to people who are deaf, blind, those who have intellectual or mobility disabilities
Source	BCFS; www.bcfs.net/fnssrecommendations

In each case, the type of auxiliary aid or service required depends on several factors, including the length, complexity and importance of the communication and the person's language skills and history. For example, it is no help to have an American Sign Language (ASL) interpreter available to communicate with deaf residents if the resident uses Signed English or other forms of communication.

4.2.4. Bathing and Toileting Needs

Whenever bathing and toileting facilities are available in a general population shelter they must include accessible bathing and toileting facilities for children and adults. If a shelter does not have accessible facilities or if there are very limited accessible facilities available, plans should include ways this limitation will be addressed. This can include agreements with private contractors to provide these facilities.

Operational Tool #23 Bathing and Toileting Ratios – Red Cross	
Portable Accessible Showers, Toilets, and Sinks	Red Cross ratio: The American Red Cross recommends that, on average, there should be one toilet for every 20 persons in the shelter. Count only those facilities that will be accessible to shelter residents and shelter staff.
Source	American Red Cross Mass Care Standards and Indicators, Version 011-072209

Many emergency managers and shelter planners look for specific ratios regarding the number of toilet rooms, showers, and baths to provide at an emergency shelter. In the context of the ADA Standards, the obligation will depend on what type of toilet facility is provided (e.g., a single-user toilet room, a toilet room with stalls).

Generally, each toilet room with stalls must have at least one fully accessible, standards-compliant water closet/stall (see 28 C.F.R. pt. 36, App. A, ADA Standards for Accessible Design §§ 4.1.2(6), 4.16, 4.17, 4.18, 4.19, 4.22, Figs. 29, 30, 31, and 32). This includes appropriate side and rear grab bars, sufficient clear floor space, the toilet seat must be between 17-19 inches from the finished floor, and the centerline of the toilet must be 18 inches from the side wall, among several other requirements. For further explanation and a tool to determine adequacy to meet the ADA's requirements, see ADA Best Practices Toolkit, Chapter 7 Addendum 3: ADA Checklist for Emergency Shelters: www.ada.gov/pcatoolkit/chap7shelterchk.htm.

If there are six or more water closets/stalls in a toilet room, then one of the stalls, in addition to the accessible stall, must be an ambulatory stall with parallel grab bars and an outward swinging door (see 28 C.F.R. pt. 36, App. A, ADA Standards for Accessible Design §§ 4.22.4, 4.26, and Fig. 30(d)). When portable toilet units are clustered together at emergency shelters, at least 5% of each cluster must be accessible portable toilet units, identified by the International Symbol of Accessibility (see 28 C.F.R. pt. 36, App. A, ADA Standards for Accessible Design § 4.1.2(6)).

Standards also exist for the provision of baths and showers when provided. None of these requirements prohibit, and emergency managers are encouraged to include, more accessible facilities than required or mandated by Federal law, so long as they are otherwise standards-compliant.

4.2.5. Quiet Area

Plans should include a strategy for providing a quiet area within each general population shelter. The stress that is created during and after an emergency or disaster is increased as a result of the noise and crowded conditions of a shelter. Without access to a quiet room or space, some people (e.g., elderly persons, people with psychiatric disabilities and parents with very young children, children and adults with autism) will be unable to function in a shelter environment (see Chapter 7 Addendum 2: The ADA and Emergency Shelters: Access for All in Emergencies and Disasters: http://www.ada.gov/pcatoolkit/chap7shelterprog.pdf).

4.2.6. Mental Health Services

Because there are differences in State and local laws, rules and regulations related to the provision of mental health services, it is important that, early in the planning process, emergency managers and shelter planners seek guidance from people with disabilities and others with access and functional needs and appropriate State and local authorities regarding these matters.

Emergency managers and shelter planners should include people with expertise regarding children and adults with and without disabilities who have access and functional needs in the mental health staffing plan. Agencies in the stakeholder group are often a good resource for shelter staff with appropriate experience (reference section on Stakeholder Coordination).

Ideally, plans should include a directive to pre-identify a licensed mental health professional(s) who will be present in a general population shelter at all times. If that is not possible due to a lack of resources, then plans should provide that a licensed mental health professional is on call to a shelter at all times. Where possible, a psychiatrist should also be on call at all times.

Operational Tool #24 Mental Health Services	
Sources for Mental Health Services	Sources include colleges and universities (faculty and students), mental health organizations, social services agencies, and places of worship. The New Jersey Division of Mental Health Services (DMHS) within the New Jersey Department of Human Services (NJDHS) has over 120 contracted community mental health provider agencies. Substance Abuse and Mental Health Services Administration (SAMHSA) has the contract to provide mental health counseling in emergency situations.
Source	BCFS; www.bcfs.net/fnssrecommendations
Source	http://www.samhsa.gov/dtac/

4.2.7. Medical and Dental Services

Because there are differences in State and local laws, rules, and regulations related to the provision of medical and dental care, it is important that, early in the planning process, emergency managers and shelter planners seek guidance from appropriate State and local authorities regarding these matters.

Children and adults with and without disabilities who have access or functional needs who require medical services may not be excluded from a general population shelter. Plans should direct that, at a minimum, medical care that can be provided in the home setting (e.g., assistance in wound management, bowel or bladder management, or the administration of medications or use of medical equipment) is available to each general population shelter.

Plans should be in place for addressing medical and dental care decisions at all times. This could include making contracts/agreements prior to an emergency or disaster for the personnel and supplies necessary to set up and staff a first aid station at each shelter site. Having these plans in place is intended to prevent inappropriate transfers to medical facilities. This will benefit the whole community by maximizing resources and limiting medical surge.

A comprehensive list of emergency medical and dental services in the area should be maintained at all times.

Operational Tool #25 Medical Station	
Onsite Medical Staff	• Provide OTCs • Implement methods to minimize contagion • Make referrals for emergency medical and dental treatment
Medical Station	Staff with a minimum of 1 RN and 1 paramedic at ratio of 1:100 shelter residents at all times
Oncall Medical Staff	Maintain on call physician and psychiatrist 24/7
Source	BCFS; www.bcfs.net/fnssrecommendations

Operational Tool #26 Disaster Health Response and Care	
Services	• Perform health assessments and referrals • Implement infection control methods and perform illness and injury surveillance • Facilitate replacement of medications, CMS and DME
Shelter Staffing	Staff with 1 licensed health professional (minimum licensure is EMT) at ratio of 1:100 shelter residents at all times
Source	American Red Cross; www.redcross.org

Plans should also include a requirement to document any medical care provided at the shelter and a strategy for accomplishing these efforts.

Operational Tool #27 Medical Services-Form	
Resident Health Care Record	Form to document a resident's visit to the first aid station and any off-premises medical or dental care
Source	BCFS; www.bcfs.net/fnssrecommendations; FORM: Resident Health Care Information; Appendix 7

In the event of a medical or dental emergency, plans should direct shelter staff to call 911 and refer residents for medical or dental care, as appropriate.

4.2.8. Medication

Because there are differences in State and local laws, rules, and regulations related to the storage, preparation, administration, documentation, and disposal of medications, it is important that, early in the planning process, emergency managers and shelter planners seek guidance from appropriate State and local authorities regarding these matters.

The fact that a person has or requires medications is not a basis for excluding him/her from a general population shelter. Plans should include procedures for obtaining, storing, dispensing, documenting, and disposing of medications in a general population shelter.

Plans should ensure that shelter residents have access to medications. One way to accomplish this is to have contracts or agreements in place with a pharmacy(s) to make medications available to shelter residents. This will minimize the time a resident has to go without necessary medications.

Operational Tool #28 Medication	
Filling Prescriptions	When a pharmacy(s) is part of a chain of pharmacies, the pharmacist may be able to obtain information about a shelter resident's medications by checking records kept in a centralized location away from the community where the emergency or disaster occurred.
Storage	As a rule, residents are responsible for safeguarding, storing, and administering their own medication. If that is not practical (due to need for refrigeration, concerns regarding drug security, or the ability of the resident to self-medicate), residents' prescription medications should be kept in a locked container used exclusively for that purpose at the first aid station.
Disposal	If medications are kept in the first aid station, staff should return all resident medications, including those that have been discontinued or have passed the expiration date, when the resident is discharged from the shelter. Needles or hypodermic syringes with needles attached must be disposed of in bio-hazard containers.
Source	BCFS; www.bcfs.net/fnssrecommendations; FORM: Medication Administration Record; Appendix 8

Operational Tool #29 Medication-Emergency Prescription Assistance Program (EPAP)	
Program Description	EPAP, a joint program of FEMA and the Department of Health and Human Services, provides an efficient way for pharmacies to process claims for prescription medications and limited DME for individuals who have no insurance coverage and are from an area declared as a disaster by the President. Claims for individuals with private insurance, employer-sponsored coverage, public insurance, or other third party coverage are not eligible for payment under the EPAP.
Services Provided	Provides a 30-day supply of essential pharmaceutical and DME lost as a direct result of the disaster or as a secondary result of loss or damage caused while in transit from the emergency site to the designated shelter facility.
Participating Pharmacies	Any enrolled pharmacy in the U.S. and its territories
Source	http://www.hhs.gov/aspr/opeo/epap/index.html

Sections 403 (a) (2) and (3) (B) and 502(a) (7) of the Robert T. Stafford Disaster Relief and Emergency Assistance Act, 42 U.S.C. §§ 5121-5206, as amended. Federal Disaster Assistance, 44 C.F.R. pt. 206.
http://www.fema.gov/about/stafact.shtm

4.2.9. Transportation Services

Children and adults with and without disabilities who have access or functional needs may require transportation services while in shelters and for re-entry into the community. Emergency managers and shelter planners should see that plans include strategies to ensure that accessible vehicles, ambulances, and drivers are available to the shelter.

Accessible vehicles should be able to transport wheelchairs, scooters, or other mobility aids, as well as equipment and supplies (e.g., portable oxygen, portable toilets, communication devices, service animals). Even if accessible public or private transportation is ordinarily available, there should be a contingency plan for transporting people if this transportation is disrupted.

Contingency plans for hazards occurring during a sheltering event should include readily available resources for transporting people with access and functional needs, as well as their life sustaining equipment, to alternative shelter sites.

Operational Tool #30 Transportation Services	
Transportation Accessible Resources	Potential accessible resources include: • Local school districts with lift-equipped school buses • Community EMS services • Vans from places of worship • Local assisted living facility vans • Local community and public transit vehicles • Para transit services • Dial-a-Ride • Fixed route buses • Area agencies on aging • Regional center vendors • Taxi systems • Non-medical emergency services • Adult day health care vehicles • Airport car rental shuttle buses • Airport shuttle buses • Older adults center vendors • Health care center vendors
Source	Guidance on Planning and Responding to the Needs of People with Access and Functional Needs, California Emergency Management Agency, Office for Access and Functional Needs www.oes.ca.gov/ Click on Office for Access and Functional Needs
Source	BCFS; www.bcfs.net/fnssrecommendations

Plans should include:

- An agreement or contract with transit providers in place prior to an emergency or disaster
- A pre-determined process for reimbursing transit providers for their services

Note that transportation providers may have prearranged agreements with multiple entities that would result in insufficient services if an emergency affected an entire State or region.

Operational Tool #31 Transportation Services - Form	
Transportation Request	Form to request resident transportation for: • Appointments and activities while living at the shelter • Returning home or to temporary house at discharge
Source	BCFS; www.bcfs.net/fnssrecommendations; FORM: Transportation Request Information; Appendix 9

4.3. Key Considerations In Planning For Transition/ Recovery

4.3.1. Transitioning Back to the Community

In order for children and adults who have access or functional needs to transition back to their community, it is important to provide them a reasonable amount of time and assistance to locate suitable housing when they cannot return to their former homes. In the past, shelters have sometimes required people needing FNSS to move to hospitals, nursing homes, or other institutions because they could not quickly locate suitable housing or the supportive services needed to live on their own. As a result, people who once lived independently in their own homes have found themselves institutionalized soon after an emergency or disaster occurred.

To comply with ADA requirements and assist people in avoiding unnecessary institutionalization, emergency managers and shelter planners should include strategies for children and adults with functional support needs in their plans to have the time and assistance required to:

- Return to their homes, or
- Locate new homes in the most integrated setting that is appropriate to their needs

Organizations providing direct services to people with disabilities and others with access or functional needs should be included in all local assistance and disaster recovery efforts to:

- Promote coordination with one other
- Maximize resources
- Eliminate duplication

Operational Tool #32 Transitioning Back to the Community	
Gap Analysis Tool for: • Re-entry • Demobilization	• Trigger point established for when to return children and adults • Transport plan for individuals unable to get home from transportation assembly points • Trigger points established for when to demobilize transit resources • Procedure established to check-out emergency evacuation resources • Procedure established to debrief demobilizing personnel • Procedure established to debrief children and adults • Demobilization procedures reviewed at least annually
Source	Guidance on Planning and Responding to the Needs of People with Access and Functional Needs, California Emergency Management Agency, Office for Access and Functional Needs; www.oes.ca.gov/ Note: Click on Office for Access and Functional Needs

Every effort should be made to move residents back to the least restrictive environment.

Operational Tool #33 Transitioning Back to the Community - Recovery	
Possible Recovery Needs	• Short- and long-term housing and wrap-around housing (Accessible) • Communication • Replacement of DME and assistive technology • Personal assistance services • Transportation • Financial assistance
Source	Guidance on Planning and Responding to the Needs of People with Access and Functional Needs, California Emergency Management Agency; www.oes.ca.gov/ Note: Click on Office for Access and Functional Needs

Operational Tool #34 Transitioning Back to the Community - Re-entry	
Re-entry Planning Strategy	Prior to an emergency/disaster: • Locate and document all available accessible hotel/motel rooms in the community • Develop contracts/agreements with these entities to reserve resources for people with access or functional needs • Determine a process for reimbursing businesses for these resources
Source	BCFS; www.bcfs.net/fnssrecommendations

4.3.2. Closing the Shelter

It is important to remember that shelters are temporary and every effort should be made to close the shelter by identifying and using the resources necessary to return residents to suitable housing that continues to meet their access and functional needs. The goal is to always support individuals toward self sufficiency.

Operational Tool #35 Closing the Shelter	
Considerations when Closing a Shelter	Consider: • Impact of the emergency or disaster on the home or environment of a person with access or functional needs (e.g., a person's home is not damaged but rest of the neighborhood is gone, power out, etc.) • The urgency of the need to return the shelter to normal conditions • Availability of accessible transportation resources
Source	Kansas Statewide Emergency Management; http://www.srskansas.org/ Note: Click on SRS Statewide Emergency Management, click on Assisting Individuals with Functional Needs During Evacuation and Sheltering, scroll down to Functional Needs Shelter Deactivation

Recovery is typically the longest and most difficult part of an emergency or disaster for all residents of a community. It is further complicated when people with disabilities and others with access or functional needs do not have access to personal assistance services, service animals, friends, neighbors, neighborhood businesses and even family members.

Operational Tool #36 Closing the Shelter- Discharging Residents	
Considerations when Discharging a Resident Requiring FNSS	Form documenting a resident's discharge from the facility including confirmation that a resident is discharged to his/her home: • Determined by police or other emergency management personnel in his or her community that he/she can return • Contacted his or her landlord or neighbor to determine whether his or her house is habitable • Confirmed that any prior in-home services are restored (e.g., Meals on Wheels, Mental Heath Authority, Personal Assistance Services) • Confirmed access to businesses necessary to return home (e.g., grocery store, pharmacy
Source	BCFS; www.bcfs.net/fnssrecommendations; FORM: Resident Discharge Information; Appendix 10

Emergency managers and shelter planners can do little to counter some of the conditions people with FNSS face during the recovery phase. They can, however, develop strategies so that the most critical services and functional needs are restored or addressed as a priority during this phrase.

Operational Tool #37 Closing the Shelter- Recovery	
Recovery Plan Considerations	• Making allowances at blockades, shelters, and other impacted areas for access to people providing personal assistance services, home health aids, visiting nurses, interpreters, support or service animals, and other individuals crucial to immediate functional needs of individuals • Identifying the impact an interruption in utility services would have on children and adults with and without disabilities who have access and functional needs • Planning for accessible shelter and appropriate temporary housing needs • Addressing how people with disabilities and others with access or functional needs who are employed by businesses that are able to open soon after a disaster will get to work • Involving representatives of the functional needs community in "after action reviews" or "hot wash reports" in order to capture the true impact of the disaster and to improve plans for the future
Source	New Hampshire Functional Needs Guidance – Support Document to the State Emergency Operations Plan http://www.nh.gov/safety/divisions/hsem/stateemergplan/index.html

Ideally, emergency managers and shelter planners should include the infrastructure needed to support recovery in the State plan long before an emergency or disaster occurs.

5. Acronyms

ADA	Americans with Disabilities Act
AED	Automated External Defibrillator
ASL	American Sign Language
CART	Computer Assisted Real time Translations
CBO	Community-Based Organization
CDC	Centers for Disease Control and Prevention
CMS	Consumable Medical Supplies
DME	Durable Medical Equipment
DRA	Disability Related Assistance
EPAP	Emergency Prescription Assistance Program
FAST	Functional Assessment Service Teams
FEMA	Federal Emergency Management Agency
FNSS	Functional Needs Support Services
ICP	Incident Command Post
IMT	Incident Management Team
OTC	Over-the-counter Drugs
PAS	Personal Assistance Services
SOP	Standard Operating Procedures
TDD	Telecommunications Device for the Deaf
TTY	Teletypewriter
VOAD	Voluntary Organizations Active in Disasters

6. Glossary

Access

The ability to fully use, enjoy, and integrate into any programs, services, activities, goods, facilities, privileges, advantages, or accommodations provided by a public or private (for-profit or not-for-profit) entity, any contracted entity, or entity that provides emergency services, including sheltering, for individuals with disabilities as defined by the ADA Amendments Act of 2008, P.L. 110-325, and those associated entities. Access may include modifications to programs, policies, procedures, architecture, equipment, services, supplies, and communication methods.

Access and Functional Needs

Those actions, services, accommodations, and programmatic, architectural, and communication modifications that a covered entity must undertake or provide to afford individuals with disabilities a full and equal opportunity to use and enjoy programs, services, activities, goods, facilities, privileges, advantages, and accommodations in the most integrated setting, in light of the exigent circumstances of the emergency and the legal obligation to undertake advance planning and prepare to meet the disability-related needs of individuals who have disabilities as defined by the ADA Amendments Act of 2008, P.L. 110-325, and those associated with them. Access and functional needs may include modifications to programs, policies, procedures, architecture, equipment, services, supplies, and communication methods. Examples of "access and functional needs" services may include a reasonable modification of a policy, practice, or procedure or the provision of auxiliary aids and services to achieve effective communication, such as: (1) an exception for service animals in an emergency shelter where there is a no pets policy; (2) the provision of way-finding assistance to someone who is blind to orient to new surroundings; (3) the provision of transferring and toileting assistance to an individual with a mobility disability; and (4) the provision of an interpreter to someone who is deaf and seeks to fill out paperwork for public benefits.

Action Plan

A plan developed by a case manager and resident(s) to assist and support that individual or family in obtaining transitional or permanent living arrangements.

Cap Tel

A communication system that provides written captions of everything a caller says on a built-in display.

Consumable Medical Supplies (CMS)

Medical supplies (medications, diapers, bandages, etc.) that are ingested, injected, or applied and/or are one time use only.

Disability

The term "disability" has the same meaning as that used in the ADA Amendments Act of 2008, P.L. 110-325, as incorporated into the ADA. See http://www.ada.gov/pubs/ada.htm for the definition and specific changes to the text of the ADA. State laws and local ordinances may also include individuals outside the Federal definition.

Durable Medical Equipment (DME)

Medical equipment (e.g., walkers, canes, wheelchairs, etc.) used by persons with a disability to maintain their usual level of independence.

First Aid Station

Dedicated section in the shelter where residents receive first aid and/or referrals for emergency medical, mental, or dental health care.

Functional Needs Support Services (FNSS)

Services that enable children and adults to maintain their usual level of independence in a general population shelter. FNSS includes reasonable modifications to policies, practices, and procedures, durable medical equipment (DME), consumable medical supplies (CMS), personal assistance services (PAS), and other goods and services as needed. Children and adults requiring FNSS may have physical, sensory, mental health, and cognitive and/or intellectual disabilities affecting their ability to function independently without assistance. Others who may benefit from FNSS include women in late stages of pregnancy, elders, and those needing bariatric equipment.

Least restrictive environment

The opportunity for adults and children with disabilities and others with access or functional needs to be with non-disabled peers to the greatest extent possible. These individuals should have access to the general shelter activities or any other programs and services that non-disabled persons can access. Generally, the less opportunity a person with a disability has to interact with non-disabled persons (peers), the more the shelter (placement) is considered to be restricted.

Medical Staff

Licensed or certified physicians, registered nurses, licensed vocational nurses, emergency medical technicians, and paramedics.

Mental Health Professional

A person who is licensed to provide counseling.

Personal Assistance Services

Services that assist children and adults with activities of daily living (e.g., bathing, toileting, eating, etc.).

Service Animal

Any animal that is individually trained to provide assistance to a person with a disability.

Shelter

A temporary facility which provides housing and basic services until persons can return home or obtain temporary or permanent house elsewhere.

Staff

People who are assigned a position in the shelter and who may or may not be paid for their services.

Universal cot

A Universal/Accessible cot that meets the following recommended criteria:

- Height – 18”-19” without [below] the mattresses
- Width – minimum 27”
- Weight capacity – 350+ pounds
- Flexible head position
- Rails, if any, must be positioned or moveable in such a way as to allow for wheelchair access (No IV pole)

Volunteers

Persons who are assigned staff positions in a shelter and meet the qualifications of that position but are not paid for their services.

7. Operational Tools *

Operational Tool #1	Planning Guidance
Operational Tool #2	Stakeholder Coordination
Operational Tool #3	Planning Shelter Capacity
Operational Tool #4	Locating the Shelter
Operational Tool #5	Evaluating the Shelter - Site Selection Tool
Operational Tool #6	Florida Shelter Selection Checklist
Operational Tool #7	San Jose California Shelter Assessment Checklist
Operational Tool #8	Durable Medical Equipment (DME) List
Operational Tool #9	Consumable Medical Supplies (CMS) List
Operational Tool #10	Communication Devices
Operational Tool #11	Resources for Assistive Technology
Operational Tool #12	Legal Authority - DME, CMS, Communication Devices
Operational Tool #13	Locating Services
Operational Tool #14	Documenting Service Providers
Operational Tool #15	Staffing the Shelter
Operational Tool #16	Assessment Teams
Operational Tool #17	Shelter Layout
Operational Tool #18	Dietary - Agreement
Operational Tool #19	Dietary - Menu
Operational Tool #20	Service Animals - Definition
Operational Tool #21	Communication - Strategies
Operational Tool #22	Communication - Devices
Operational Tool #23	Bathing and Toileting Ratios - Red Cross
Operational Tool #24	Mental Health Services
Operational Tool #25	Medical Station
Operational Tool #26	First Aid Station
Operational Tool #27	Medical Services - Form
Operational Tool #28	Medication
Operational Tool #29	Medication - Emergency Prescription Assistance Program (EPAP)
Operational Tool #30	Transportation Services
Operational Tool #31	Transportation Services - Form
Operational Tool #32	Transitioning Back to the Community
Operational Tool #33	Transitioning Back to the Community - Recovery
Operational Tool #34	Transitioning Back to the Community - Re-entry
Operational Tool #35	Closing the Shelter
Operational Tool #36	Closing the Shelter - Discharging Residents
Operational Tool #37	Closing the Shelter - Recovery

* **Operational Tools** – The operational tools in this document are excerpts and examples taken from various agency and jurisdictional documents throughout the United States. While they are not meant to dictate a State's policies or procedures, they do present ideas and practices that can be adapted to fit each State's specific needs.

8. Appendices

Page	Appendix	
47	Appendix 1	ADA Checklist for Emergency Shelters
115	Appendix 2	FORM: Contact Information for Shelter Services Providers
117	Appendix 3	Durable Medical Supply Sample List
118	Appendix 4	Consumable Medical Supply Sample List
125	Appendix 5	Guidance on Providing Personal Assistance Services
155	Appendix 6	One Day Menu for General Population Shelters Providing Functional Needs Support Services
156	Appendix 7	FORM: Resident Health Care Information
158	Appendix 8	FORM: Medication Administration Record
160	Appendix 9	FORM: Transportation Request Information
162	Appendix 10	FORM: Resident Discharge Information

Appendix 1

ADA Checklist for Emergency Shelters

For the 508 compliant version of the ADA Checklist for Emergency Shelters go to http://www.ada.gov/pcatoolkit/chap7shelterchk.htm

U.S. Department of Justice
Civil Rights Division
Disability Rights Section

Americans with Disabilities Act

ADA Checklist for Emergency Shelters

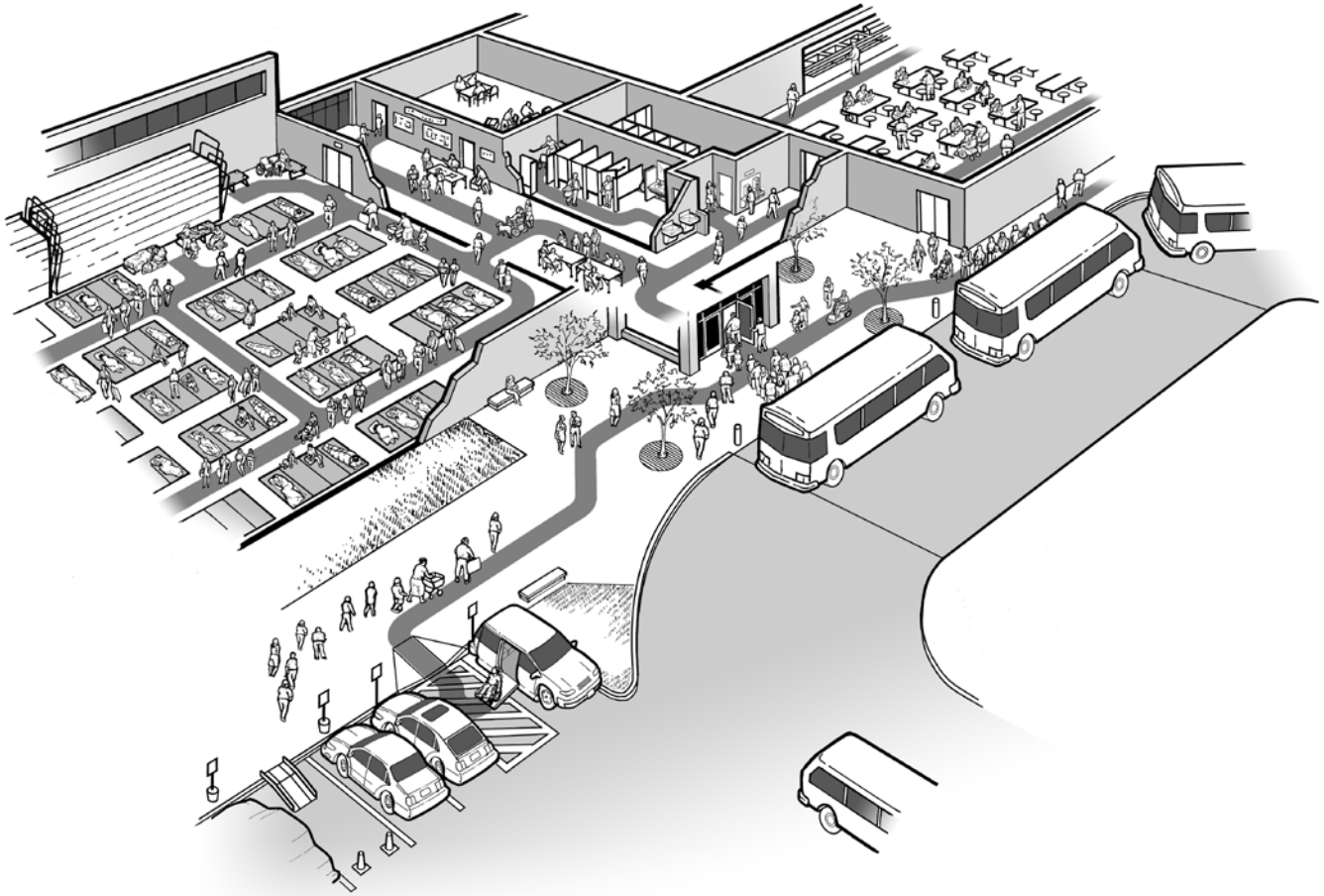

July 26, 2007

Reproduction

Reproduction of this document is encouraged. Additional copies of this publication may be obtained, viewed or downloaded from the Publications section of the ADA Website (www.ada.gov) or by calling the ADA Information Line at 800-514-0301 (voice), 800-514-0383 (TTY).

Disclaimer

The ADA authorizes the Department of Justice to provide technical assistance to individuals and entities that have rights or responsibilities under the Act. This document provides informal guidance to assist you in understanding the ADA and the Department's regulation. However, this technical assistance does not constitute a legal interpretation of the statute.

ADA Checklist for Emergency Shelters 1
A. Evaluating the Physical Accessibility of Emergency Shelters 1
B. Conducting Accessibility Surveys 2
C. Getting Started 2
D. Tools Needed 3
E. Taking Measurements 3
1. Sloped Surfaces 3
2. Using the Tape Measure 4
3. Measuring Door Openings 5
F. Taking Photographs 5
G. Completing the Survey and Checklist 5
H. After Completing the Survey and Checklist 6

Step One: Accessible Shelter Quick-Check Survey 7
Selecting Sites to Survey for Accessibility 7
A. Accessible Entrance 7
B. Accessible Routes To All Service/Activity Areas 8
C. Accessibility within Toilet Rooms 10

Step Two: Ada Checklist For Emergency Shelters 11
Getting to the Emergency Shelter 11
A. Passenger Drop-Off Areas 11
B. Parking 14
1. Typical Issues 14
2. Parking Spaces Checklist 15
3. Temporary Solutions for Emergency Sheltering - Parking 18
C. Sidewalks and Walkways 19
1. Typical Issues for Individuals Who Use Wheelchairs, Scooters, or other Mobility Devices 19
Accessible Ramp Features 21
Temporary Solutions For Emergency Sheltering - Ramps 22
2. Typical Issues for Individuals Who Are Blind or Have Low Vision 24
Temporary Solutions For Emergency Sheltering - Protruding Object Hazards 26
D. Entering the Emergency Shelter 27
Building Entrance 27
E. Hallways and Corridors 30
1. Typical Issues for Individuals Who Use Wheelchairs, Scooters, or Other Mobility Devices 30
2. Typical Issues for People Who are Blind or Have Low Vision 37
F. Check-In Areas 39

Living at the Emergency Shelter 40
G. Sleeping Areas 40
H. Restrooms and Showers 42
Toilet Stalls 46
I. Public Telephones 50
J. Drinking Fountains 52
K. Eating Areas 54

Other Issues 56
L. Availability of Electrical Power 56
M. Single-User or "Family" Toilet Room 57
N. Health Units/Medical Care Areas 62
O. Accessible Portable Toilets 63

ACCESSIBLE EMERGENCY SHELTERS

One of the most important roles of State and local government is to protect people from harm, including helping people obtain food and shelter in major emergencies. When disasters occur, people are often provided safe refuge in temporary shelters located in schools, office buildings, tents, or other facilities. Advance planning for an emergency shelter typically involves ensuring that the shelter will be well stocked with basic necessities, such as food, water, and blankets. Planning should also involve ensuring that these shelters are accessible to people with disabilities. Making emergency sheltering programs accessible is generally required by the Americans with Disabilities Act of 1990 (ADA).

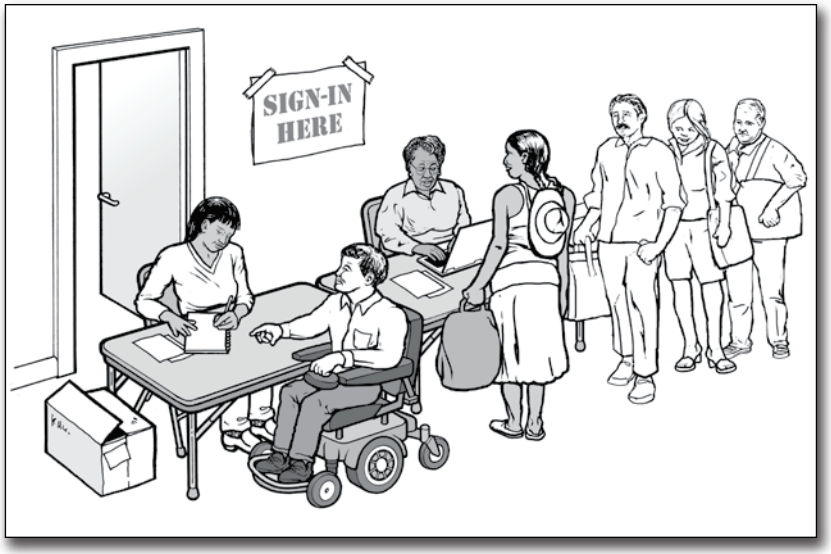

A. Evaluating the Physical Accessibility of Emergency Shelters

In order to be prepared for an emergency that requires sheltering, accessible features should be part of an emergency shelter. A first step to providing an accessible shelter is to identify any physical barriers that exist that will prevent access to people with disabilities. One good way to do this is to inspect each shelter facility that your community plans to use in an emergency and identify barriers to people with disabilities, including people who use wheelchairs or scooters or who have difficulty walking, people who are deaf or hard-of-hearing, and people who are blind or who have low vision. Facilities built or extensively altered since the ADA went into effect in 1992 may have few barriers to accessibility and could be good choices for emergency shelters. Facilities built before 1992 and not altered to provide accessibility may have barriers that prevent access to people with disabilities.

When evaluating physical accessibility in older facilities, it may be a good idea to do the analysis in two parts. If you suspect that an older facility is not accessible, you can do a preliminary analysis before completing a detailed accessibility survey. This preliminary analysis, or quick-check, can eliminate facilities with extensive barriers so that the focus can be on those facilities that are most appropriate to become accessible shelters. To help identify older

buildings that may be good candidates to become accessible shelters, a copy of the Accessible Shelter Quick-Check Survey is provided **on page 7.** After completing the Quick-Check Survey, if you have checked "Yes" for most of the questions on the forms, you should conduct a full accessibility survey using the ADA Checklist for Emergency Shelters.

If you find barriers to accessibility after completing the checklist, the next step is to either remove the barriers or identify other nearby accessible facilities that can serve as a shelter. In communities with more than one emergency shelter, until all shelters are accessible, the locations of accessible shelters should be widely publicized, particularly to people with disabilities and organizations that serve the disability community.

B. Conducting Accessibility Surveys

The following Quick-Check Survey (beginning on page 7) and the ADA Checklist for Emergency Shelters (beginning on page 11) are designed to assist State and local officials and operators of emergency shelters to determine whether a facility being considered for use as an emergency shelter is accessible and if not, whether modifications are needed to remove barriers or whether relocation to another accessible facility is necessary. Filling out the Quick-Check Survey will provide guidance on whether a facility has certain basic accessible features, and filling out the detailed ADA Checklist for Emergency Shelters will provide specific information on any barriers to accessibility.

C. Getting Started

Individuals conducting the surveys need not be experienced in evaluating facilities for accessibility. The checklist provides guidance on how to complete the survey and will prompt the user to check key elements. The checklist pages also provide space for notes and other key information. The checklist is designed to prompt the user to check key features by asking questions about sizes, sloped surfaces, and availability of accessible features; and in some areas, it suggests alternatives if a physical barrier is identified. By following the directions provided for filling out the checklist, staff can identify accessible shelters and develop information needed to implement temporary and permanent accessibility modifications.

An evaluation of shelter accessibility should focus on those areas of the facility that may be used for providing shelter in an emergency. These include areas where people are dropped off by a bus, van, or car; the parking area; the entrance to the shelter; pedestrian routes (both exterior and interior); sleeping, eating, information, and recreational areas; and toilet rooms.

Before shelter accessibility is evaluated, it is useful for staff to review the instructions for filling out the checklist and become familiar with the questions. It is also helpful to practice taking measurements, photographs, and recording information.
On the day of the survey, it is helpful to first become familiar with certain areas before starting to record information. Upon arrival at the proposed shelter, first find the areas where people will disembark from vehicles, both passenger drop-off and loading zones as well

as parking areas. Next find the entrances to the shelter areas that will be used during an evacuation. If possible, take an identifying "location" photograph that shows the name of the facility and the address so that other photographs can be identified correctly. When inside the building, locate the areas where people are likely to register, sleep, and eat. Locate the toilet rooms that serve the shelter area. It is also a good idea to locate any areas used for telephones, food distribution, and medical services.

D. Tools Needed

The following items are needed for the survey:

- A metal tape measure that is at least 20 feet long;
- A digital level or bubble level that is 24 inches long;
- A door pressure gauge;
- A digital (preferred) or film camera with a flash;
- One copy of the checklist for each shelter (and Quick-Check Survey if used); and
- A clipboard and pens.

If you are not familiar with taking the types of measurements needed to complete the checklist, review the following section and practice using the tools before going to conduct a survey.

E. Taking Measurements

1. Sloped Surfaces

Measuring the slope of a ramp, parking space, walkway, or other ground or floor surface is important to identify whether the surface is accessible. The amount of slope or grade is described as the proportion of a vertical rise to a horizontal length. It is usually described as:

- a ratio (e.g., 1:20, which means one unit of vertical rise for each 20 units of horizontal length); or
- a percentage (e.g., 8.33% which equates to a ratio of 1:12 or 4.76 degrees).

The easiest way to measure slope is to use a digital level. The digital display gives a reading that may be shown as a percent, degrees, or as a digital bubble. Before using a digital level, make sure to understand the directions for its use. It will need to be calibrated before each use. The maximum running slope generally allowed for ramps is 1:12 (8.33% or 4.76 degrees). Cross slope is the slope or grade of a surface perpendicular to the running slope. The most cross slope allowed on an accessible route is 1:50 (2% or 1.15 degrees).

Another way to measure slope that requires more effort is to use a 24-inch level with leveling bubble and a metal tape measure. Place the level on the sloped surface in the direction you wish to measure. Rest one end of the level at the highest point of the sloped surface and lift the other end (see below) until the bubble is in the middle of the tube. This is the "level" position. While the level is in this position, measure the distance between the end of the level and the sloped surface below. If the distance is two inches or less, then the slope is 1:12 or less. When the distance is more than two inches, record the distance on the checklist so the exact slope can be calculated later. For measuring cross slope, if the distance, measured from the level position, is ½ inch or less then the slope is 1:48 or less.

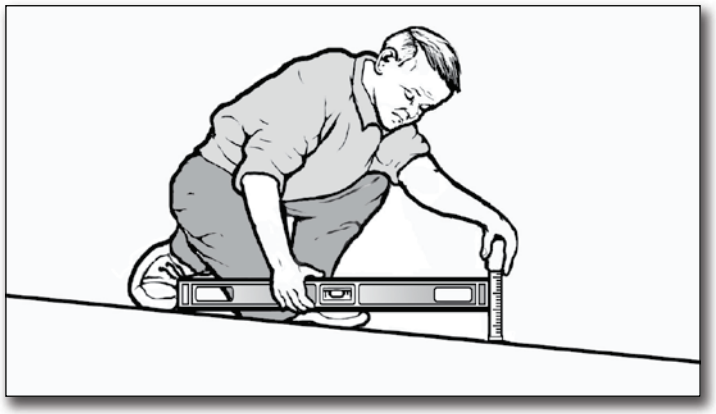

Measuring slope using a 24-inch bubble level and tape measure

2. Using the Tape Measure

A metal tape measure is needed to measure the length, width, height, and depth of various elements. When measuring long distances, pull the tape tight to get an accurate measurement. The checklist will offer guidance for the specific measurement that is required.

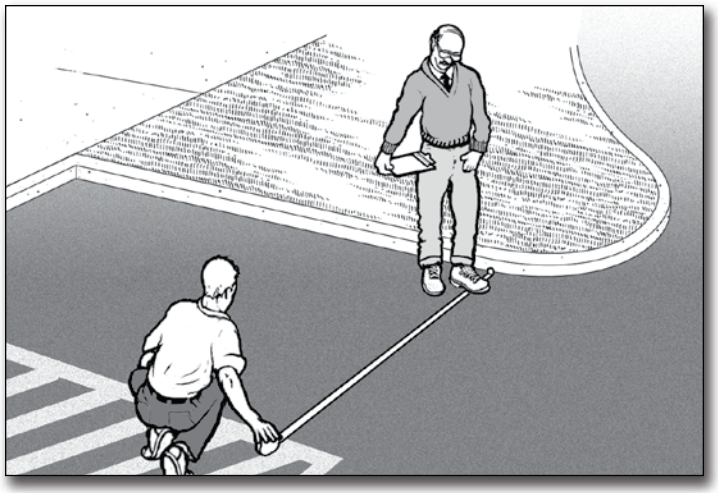

Using a tape measure to measure the width of a parking space

3. Measuring Door Openings

Special care is needed when measuring the clear opening of a doorway. To measure the clear opening of a standard hinged door, open the door to 90 degrees. Place the end of the tape measure on the side of the door frame next to the clear opening (see below). Stretch the tape across the door opening to the face of the door. This measures the clear width of the door opening through which people pass, which is less than the width of the door itself.

Measuring the clear opening from the face of the doorstop on the frame to the face of the open door

F. Taking Photographs

A comprehensive set of photographs makes it easier to understand existing conditions after the survey is completed. It is a good idea to take many photos of the exterior and interior of the potential shelter. It is likely that many other people in your decision-making process will need to review information about the facility you are surveying, so try to record each element that you survey with several photos. It is always useful to first take a photo that will clearly identify the location of the element so that others will easily be able to find the element. Then, take several close-up shots of that element to document the conditions you found during your survey. If you are not familiar with the camera that you plan to use, practice using it both indoors and outdoors before starting to survey the various facilities being considered for use as shelters. If you are using a digital camera, it is a good idea to review the images as you take them to ensure that you have good quality photographs.

G. Completing the Survey and Checklist

The survey and checklist forms will prompt you for what to look at and where to measure. You should write down all answers and notes for use later in the planning process. If a photo is taken of a particular element or condition, then you should note this on the checklist. It is usually more efficient for two or three people to work together doing these surveys. One person can measure while the other records the information and takes photos.

For each item, check either “Yes” or “No.” If the measurement or number falls short of that required for accessibility, write the measurement or number to the right of the question. Add notes or comments as needed. For some questions when “No” is the answer, the checklist will include a prompt to check for an alternate solution. Information on possible alternative solutions can be used later to decide how to better provide accessibility. Taking several photos is also helpful when the answer is “No” and an alternative way to provide accessibility is not readily apparent.

When completing the survey or checklist, try to answer every question in each section unless the element is not present at that facility. For example, if no parking lot is provided at the facility, (such as where only on-street parking is provided), do not measure the size of the on-street parking spaces.

Some sections of the checklist are divided into two parts, one for individuals with a mobility disability and the other for individuals who are blind or who have low vision. While evaluating a facility you will be checking to ensure that an accessible route is provided. The accessible route is a continuous unobstructed pedestrian path without steps or steep slopes that connects all accessible site and building features and spaces together. A continuous accessible route must be available at the shelter for people who use a wheelchair, scooter, or other mobility device. Other sections of the checklist ask questions related to individuals who are blind or have low vision. These questions cover all circulation paths, not just pedestrian paths that are also an accessible route.

The survey and the checklist are based on some of the requirements from the ADA Standards for Accessible Design (the Standards). Questions have been selected to reflect features that may be most important for the short-term stays common for emergency shelters. To learn more about the Standards, see the Department of Justice regulations, 28 C.F.R. Part 36, Appendix A. The regulations and the Standards are available at www.ada.gov. Copies are also available by calling the ADA Information Line at 800-514-0301 (voice) or 800-514-0383 (TTY).

H. After Completing the Survey and Checklist

Once you have completed the survey and filled out the checklist, you can determine which elements or spaces in a potential shelter facility are accessible and which may need modifications. If most answers are “yes,” the facility may need little or no modification. If some answers are “no,” modifications may be needed to remove barriers found in that space or element. Emergency shelters in older buildings with inaccessible features might be made accessible with temporary modifications, (such as portable ramps at the entrance and accessible parking spaces marked off by traffic cones) until permanent modifications can be made. However, where facilities are not capable of being made accessible, another facility will need to be selected for use as a shelter.

Step One: Accessible Shelter Quick-Check Survey

Notes/Comments

Selecting Sites to Survey for Accessibility

Providing an emergency shelter that is accessible to people with disabilities involves making sure that a number of accessible features and spaces are available. To verify accessibility before deciding on a site for an emergency shelter can involve asking many questions such as those in the ADA Checklist for Emergency Shelters. For some older buildings, especially those on hilly sites and those that have not been renovated, remodeled, or altered since 1992, before completing the detailed checklist, it may be better to do a pre-test that can rule out a facility with major accessibility problems so available resources can be focused on other locations. The following questions will help evaluate whether a facility has such major accessibility barriers. After this first step, buildings that do not have major accessibility problems should be surveyed more thoroughly, using the ADA Checklist for Emergency Shelters, to find out which, if any, barriers need to be removed to provide an accessible shelter.

A. Accessible Entrance

Having a way to get into the emergency shelter on a surface that is firm, stable, slip-resistant, without steps or steep slopes, and wide enough for a person using a wheelchair or other mobility aid is essential.

A1. Is there a sidewalk connecting the parking area and any drop off area to the walkway leading to the building? [ADA Standards § 4.1.3(1)] Yes _____ No _____

A2. Is there a route without steps from this sidewalk to the main entrance? Yes _____ No _____

If No, are there two or fewer steps? Yes _____ No ____ Number of Steps: _____

If No, is there another entrance without steps that is connected by a sidewalk to the parking or drop off area? Yes _____ No _____Location: _____

_____

B. Accessible Routes To All Service/Activity Areas

Everyone must be able to get to each of the various areas where activities and services take place. This includes people who use mobility devices, such as wheelchairs and scooters, being able to get to locations where supplies are distributed, to eating areas, to sleeping areas, to toilet rooms, and to other activity areas without encountering stairs or steep slopes.

Check all of the various ways to get to each of the areas where sheltering activities are likely to take place (sleeping, eating, supply distribution, bathrooms, etc.):

B1. Sleeping Area (Location: _____)

B1-a. Is there a route without steps from the accessible entrance to this location? Yes _____ No _____

If No, are there two or fewer steps? Yes ___ No ___Number of Steps: _____

If No, is there a ramp, lift, or elevator? Yes ___ No ___Type of device: _____

B1-b. If an elevator or lift provides the only accessible route, is there a source of backup power to operate the device for an extended period? Yes _____ No _____

B2. Eating Area (Location: _____)

B2-a. Is there a route without steps from the accessible entrance to this location? Yes _____ No _____

If No, are there two or less steps? Yes ___ No ____ Number of Steps: _____

If No, is there a ramp, lift, or elevator? Yes ___ No ____ Type of device: _____

Notes/Comments

B2-b. If an elevator or lift provides the only accessible route, is there a source of back up power to operate the device for an extended period? Yes _____ No _____

B3. Supply Distribution Area (Location: _____)

B3-a. Is there a route without steps from the accessible entrance to this location? Yes _____ No _____

If No, are there two or fewer steps? Yes ___ No ___ Number of Steps: _____

If No, is there a ramp, lift, or elevator? Yes ___ No ___Type of device: _____

B3-b. If an elevator or lift provides the only accessible route, is there a source of backup power to operate the device for an extended period? Yes _____ No _____

B4. Toilet Rooms (Location: _____)

B4-a. Is there a route without steps from the accessible entrance to this location? Yes _____ No _____

If No, are there two or fewer steps? Yes ___ No ____ Number of Steps: _____

If No, is there a ramp, lift, or elevator? Yes ____ No ____Type of device: _____

B4-b. If an elevator or lift provides the only accessible route, is there a source of backup power to operate the device for an extended period? Yes _____ No _____

Notes/Comments

C. Accessibility Within Toilet Rooms

Notes/Comments

C1-a. Is there an area within the toilet room where a person who uses a wheelchair or mobility device can turn around - either a minimum 60-inch diameter circle or a "T"-shaped turn area? [ADA Standards §§ 4.22.3; 4.2.3, Fig. 3] Yes _____ No _____

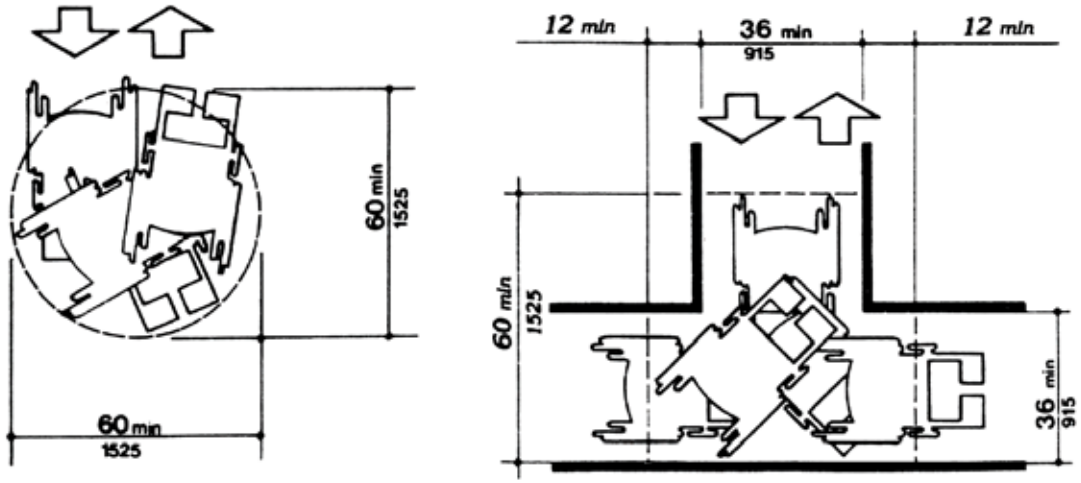

Fig 3
Minimum spaces for turning

C1-b. Is at least one stall at least 60 inches wide and 56 inches deep (wall mounted toilet) or 59 inches deep (floor mounted toilet)? [ADA Standards § 4.17.3] Yes _____ No _____

Using The Information:
If most of your answers to the previous questions are Yes, then the facility has some basic accessibility features and should be surveyed using the ADA Checklist for Emergency Shelters. Whenever most of your answers are No, then these problems should be evaluated before conducting a more detailed survey, or perhaps you should consider another location to serve as an emergency shelter.

STEP TWO — ADA CHECKLIST FOR EMERGENCY SHELTERS

Getting to the Emergency Shelter

A. Passenger Drop-Off Areas

During an evacuation the most efficient method of transporting people to shelters likely will include using vans and buses. Accessible buses and vans with wheelchair lifts will be needed to transport people who use wheelchairs, scooters, or other mobility aids. When they arrive at the shelter, an accessible drop-off area (also known as a passenger loading zone) is needed for people using mobility aids to get off of the bus or van and proceed to the shelter's accessible entrance.

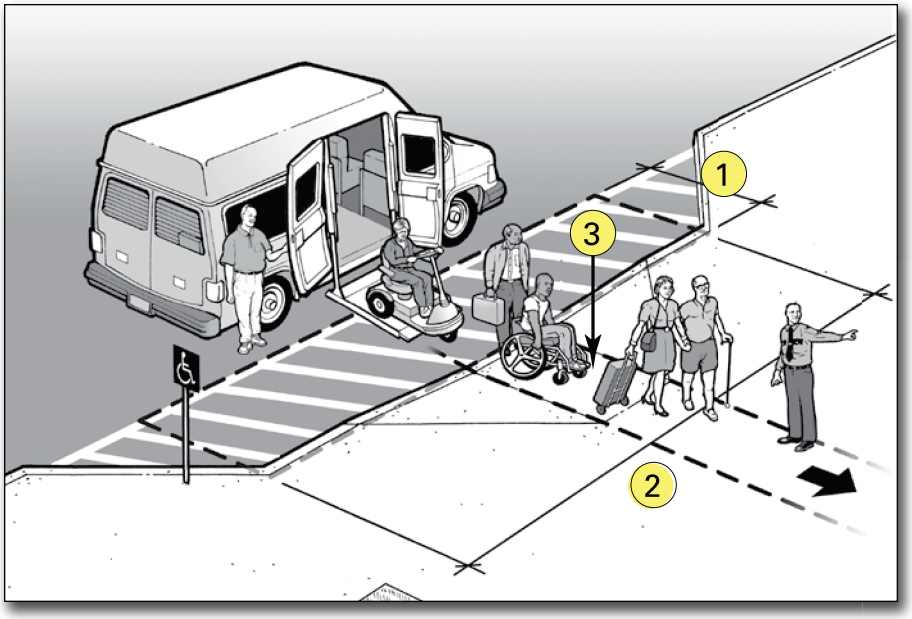

Accessible drop-off area with an access aisle provided at the same level as the vehicle.

An accessible drop-off area must have a level access aisle that is adjacent and parallel to the vehicle space. Where a curb separates the vehicle space from the access aisle or the access aisle from an accessible route, a curb ramp must be provided so people with mobility disabilities can get to the accessible route leading to the accessible entrance of the shelter.

Notes:

1. Access aisle depth is at least 5 feet.
2. Access aisle length is at least 20 feet.
3. Curb ramp connects the access aisle for the accessible drop- off area (which is at the level of the parking lot) to the accessible route to the accessible entrance of the shelter.

The access aisle may be at the parking-lot level or at sidewalk level. If the access aisle is at the parking-lot level, the curb ramp is provided between the access aisle and the sidewalk. If it is at the sidewalk level, an adjacent curb ramp is provided between the street and the sidewalk.

A1. Is a relatively level (1:50 or 2% maximum slope in all directions) access aisle provided adjacent and parallel to the side of the vehicle pull-up area? [ADA Standards § 4.6.6]

If No, look for another relatively level location that is on an accessible route to the accessible shelter entrance that could be used.

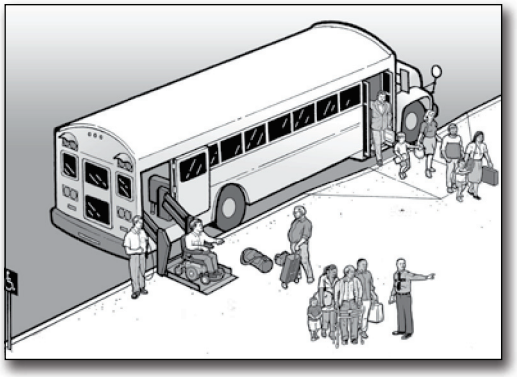

Accessible drop-off area with an access aisle provided as part of the sidewalk.

Yes _____ No _____

A2. Is the vehicle pull-up area relatively level (1:50 or 2% maximum slope in all directions)? Yes _____ No _____

A3. Is the area for the access aisle at least 5-feet wide and 20-feet long? [ADA Standards § 4.6.6]. Yes _____ No _____

Note: Unlike at an accessible parking space, the surface for the access aisle of an accessible passenger drop-off area does not have to be marked or striped.

A4. Is there vertical clearance of at least 114 inches (9 feet 6 inches) from the site entrance to the vehicle pull-up area, the access aisle, and along the vehicle route to the exit? [ADA Standards § 4.6.5] Yes _____ No _____

Notes/Comments

A5. Is a curb ramp provided between the vehicle pull up area and the access aisle (see above) or the access aisle and the accessible route to the accessible entrance? [ADA Standards § 4.6.6] Yes _____ No _____

If No, is there another area with a curb ramp and on an accessible route that could serve as the drop-off area? If there is no curb ramp near the drop-off area, can a temporary ramp be used to connect the drop-off area access aisle to the accessible route to the accessible shelter entrance?

A6. If a curb ramp is provided, is the running slope of the ramp surface (not counting the side flares) no more than 1:12 or 8.33%? [ADA Standards § 4.7.2] Yes _____ No _____

A7. Is the width of the curb ramp surface at least 36 inches (not counting the side flares)? [ADA Standards § 4.7.3] Yes _____ No _____

A8. Does an accessible route connect the curb ramp to the shelter's accessible entrance? [ADA Standards § 4.1.2(1)] Yes _____ No _____

Notes/Comments

B. Parking

1. Typical Issues

During an evacuation, some individuals with a mobility disability may arrive at the shelter in a car or van. When parking areas are provided at the shelter site, accessible parking spaces must be provided. Individuals with disabilities who arrive at the shelter in their own car or van need to be able to park in an accessible parking space close to an accessible entrance. Accessible parking spaces need an adjacent access aisle that provides space for a person with a mobility disability to exit their vehicle. The access aisle connects directly to an accessible route that leads to an accessible building entrance. In order to be usable, the access aisle must be relatively level, clear of gravel or mud, and the surface must be in good condition without wide cracks or broken pavement.

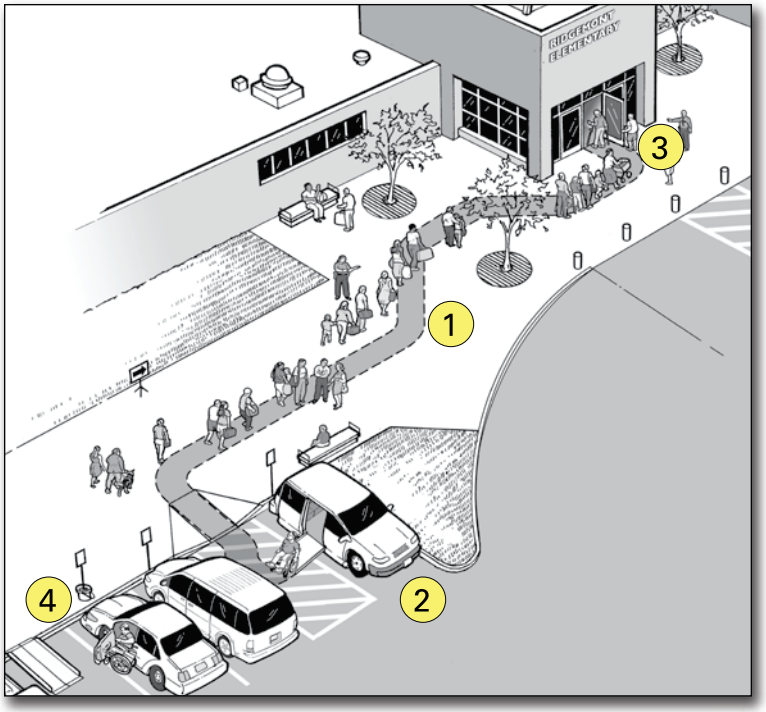

An accessible entrance to an emergency shelter with accessible parking and additional temporary accessible parking spaces

An accessible route connects the permanent access aisle of each accessible parking space with the accessible entrance to the shelter. When an accessible route crosses a curb, a curb ramp must be provided. During an emergency, as a temporary measure, if additional accessible parking spaces are needed, a portable ramp can be provided in a parking space marked off by traffic cones to provide two additional accessible parking spaces (see page 18).

Notes:

1. Accessible route.
2. Accessible parking with van accessible parking space.
3. Accessible entrance to shelter.
4. Temporary accessible parking spaces.

2. Parking Spaces Checklist

Notes/Comments

B1. When parking areas are provided at the shelter site, count the total number of parking spaces provided in each area. Is the minimum number of accessible parking spaces provided, based on the total number of available parking spaces (see table below)? [ADA Standards § 4.1.2(5)(a)] Yes _____ No _____

Total Number of Parking Spaces in Each Parking Area	Required Minimum Number of Accessible Spaces
1 - 25	1 van-accessible space w/min. 96-inch-wide access aisle (van space)
26 - 50	1 space w/min. 60-inch-wide access aisle + 1 van space
51 - 75	2 spaces w/min. 60-inch-wide access aisle + 1 van space
76 - 100	3 spaces w/min. 60-inch-wide access aisle + 1 van space
101 - 150	4 spaces w/min. 60-inch-wide access aisle + 1 van space

If more than 150 parking spaces are provided in a particular lot, see section 4.1.2 of the ADA Standards for the number of accessible parking spaces required.

B2. Does each accessible parking space have its own, or share, an adjacent access aisle that is least 60 inches (5 feet) wide? [ADA Standards § 4.6.3] Yes _____ No _____

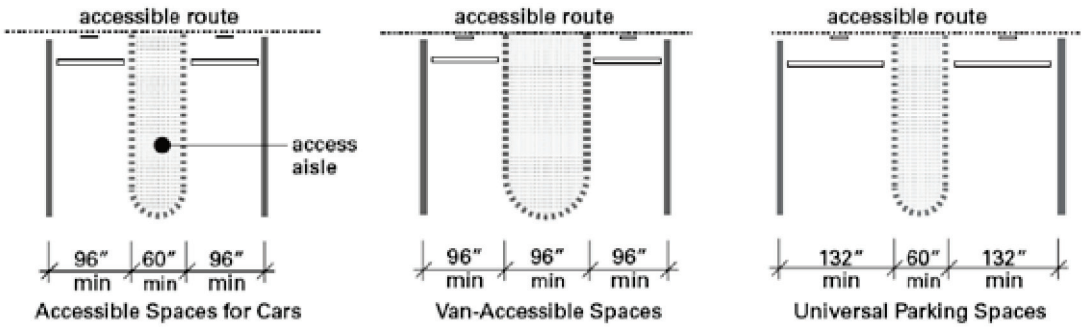

Accessible Parking Spaces Showing Minimum Width of Vehicle Space and Access Aisle

			Notes/Comments
B3.	Is there at least one van-accessible parking space provided with an access aisle that is at least 96 inches (8 feet) wide or are universal parking spaces provided that are 132 inches (11 feet) wide for vehicle space with a 60-inch (5-feet) wide access aisle? [ADA Standards § § 4.1.2(5), A4.6]	Yes _____ No _____	
B4.	For van-accessible spaces (particularly in a garage or parking structure), is there ***vertical*** clearance of at least 98 inches (8 feet - 2 inches) for the vehicle route to the parking space, the parking space, the access aisle, and along the vehicle route to the exit? [ADA Standards § 4.6.5] If No: Can the route be cleared by removing or raising low objects, or can each van-accessible parking space be relocated?	Yes _____ No _____	
B5.	Are all accessible parking spaces, including the access aisle, relatively level (1:50 or 2%) in all directions? [ADA Standards § 4.6.3] If No: Look for a nearby area that is relatively level in all directions that could serve as an accessible parking space with an accessible route to the accessible entrance to the shelter.	Yes _____ No _____	
B6.	Does each accessible parking space have a sign with the symbol of accessibility that is visible when a vehicle is parked in the space? [ADA Standards § 4.6.4]	Yes _____ No _____	

B7. If there is a curb between the access aisle and the accessible route to the building, is there a curb ramp that meets the following requirements: [ADA Standards § 4.7] Yes _____ No _____

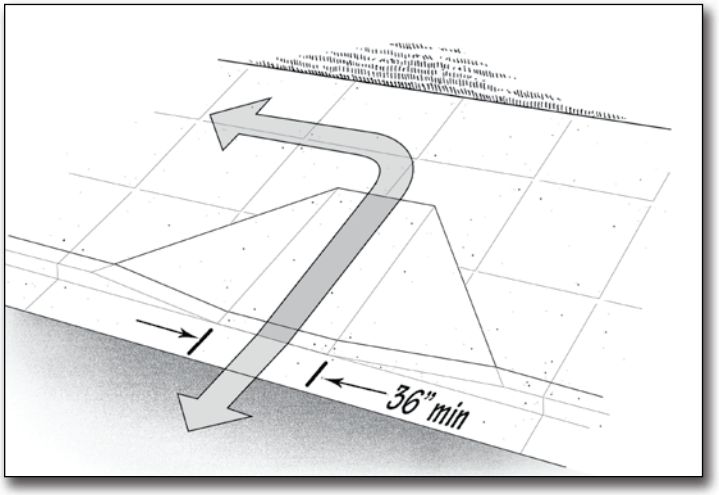

Curb ramp showing minimum 36-inch width for ramp section and 1:12 slope on ramp section.

B7-a. Is the curb ramp surface at least 36 inches wide, excluding flared sides? [ADA Standards § 4.7.3] Yes _____ No _____

B7-b. Is the slope (up or down the ramp) no more than 1:12? [ADA Standards § 4.7.2] Yes _____ No _____

Note: 1:12 is one inch of vertical height for each 12 inches of length.

B8. Are the accessible parking spaces serving the shelter on the shortest accessible route to the accessible entrance? [ADA Standards § 4.6.2] Yes _____ No _____

B9. Does each access aisle connect to an accessible route from the parking area to the shelter's accessible entrance? [ADA Standards § 4.6.2] Yes _____ No _____

Notes/Comments

3. Temporary Solutions for Emergency Sheltering - Parking

Problem: Parking at the shelter facility either has no accessible parking, not enough accessible parking, or accessible parking spaces are not on level ground.

Suggestion: Find a fairly level parking area near the accessible entrance and mark the area for accessible parking spaces. Three regular parking spaces will make two accessible parking spaces with a shared access aisle. Provide a sign designating each accessible parking space. Ensure there is an accessible route from each access aisle to the accessible entrance.

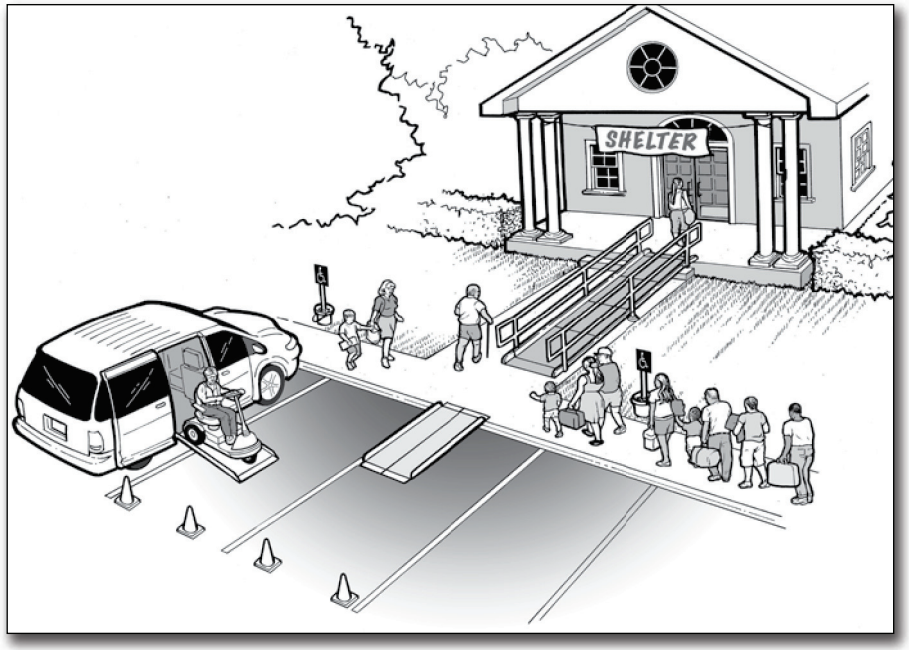

Three standard parking spaces are converted into an accessible parking space with an access aisle. Cones mark the access aisle and a temporary curb ramp with edge protection connects to an accessible route to the shelter.

If temporary accessible spaces are used, mark the temporary accessible parking spaces with traffic cones or other temporary elements. Traffic cones can also be used to mark off an access aisle if designated accessible parking spaces lack an access aisle or if the access aisle is too narrow. At least one accessible parking space should be a van-accessible parking space with an access aisle that is at least 96 inches wide.

C. Sidewalks and Walkways

1. Typical Issues for Individuals Who Use Wheelchairs, Scooters, or other Mobility Devices

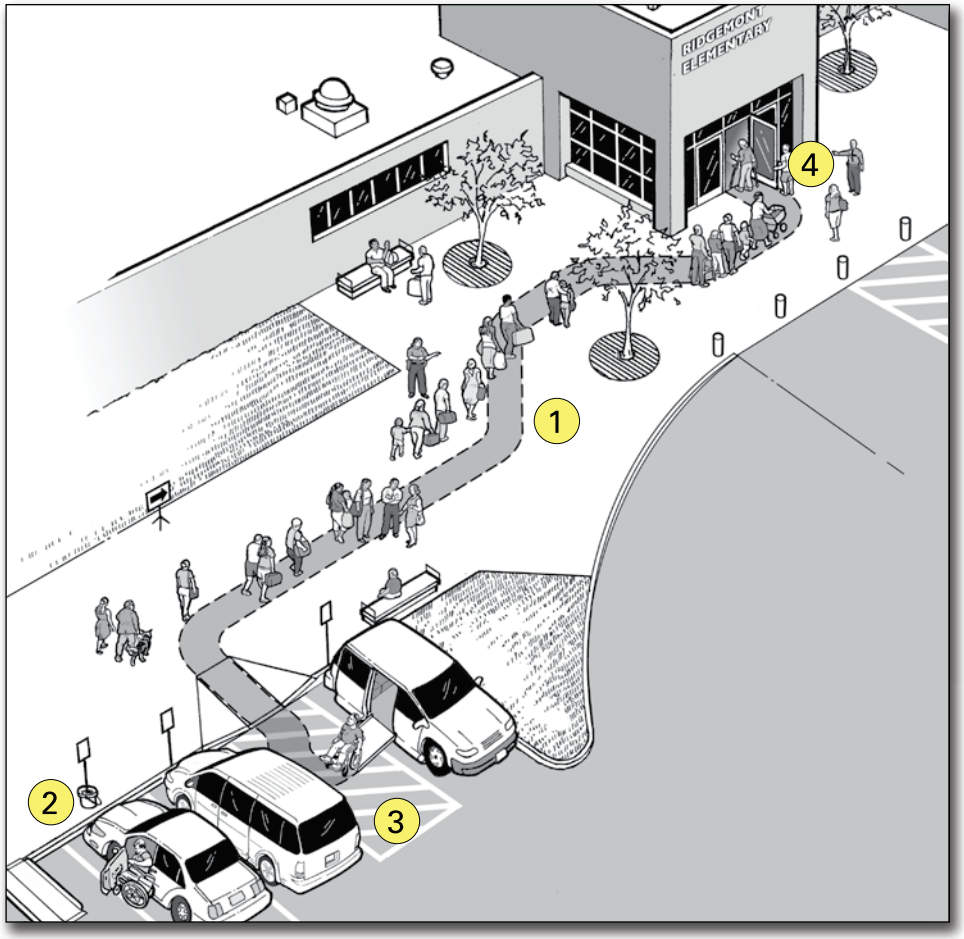

An accessible entrance to a shelter with accessible parking and an accessible drop-off area

An accessible route connects accessible passenger drop-off areas, accessible parking spaces, and other accessible elements, like a route from a bus stop, to an accessible building entrance. The accessible route is essential for people who have difficulty walking or who use wheelchairs or other mobility aids to get to the accessible entrance of the shelter. The accessible route must be at least 36 inches wide (it may narrow briefly to 32 inches wide where utility poles, signs, etc. are located along the accessible route). Abrupt level changes, steps, or steep running or cross slopes cannot be part of an accessible route. Where ramps are used, they cannot be steeper than 1:12. Ramps with a vertical rise of more than 6 inches must have handrails on both sides. Ramps must also have edge protection to stop wheelchairs from falling off the sides, and level landings at the top and bottom of each segment and where the ramp changes direction.

Notes:

1. Accessible route
2. Accessible drop-off area
3. Accessible parking with van-accessible parking space
4. Accessible entrance to shelter

			Notes/Comments
C1-a.	Is an accessible route provided from accessible parking spaces to the accessible entrance of the shelter? [ADA Standards § 4.1.2(1), 4.3]	Yes _____ No _____	
C1-b.	Is an accessible route provided from public sidewalks and public transportation stops on the shelter site (if provided) to the accessible entrance for the shelter? [ADA Standards § 4.1.2(1)] *Note: The accessible route is at least 36 inches wide and may be a portion of a sidewalk.*	Yes _____ No _____	
C1-c.	Is the accessible route at least 36 inches wide? [ADA Standards § 4.3.3] If No, does the accessible route narrow to 32 inches for no more than 2 feet?	Yes _____ No _____	
C1-d.	Is the accessible route free of steps and abrupt level changes higher than 1/2 inch? [ADA Standards § 4.3.8] *Note: Level changes between 1/4 inch and 1/2 inch should be beveled (sloped) at 1:2 maximum.*	Yes _____ No _____	
C1-e.	Where an accessible route crosses a curb, is a curb ramp provided? [ADA Standards § 4.3.8]	Yes _____ No _____	
e-i.	Is the curb ramp surface at least 36 inches wide, excluding flared sides? [ADA Standards § 4.7.3]	Yes _____ No _____	
e-ii.	Is the running slope (up or down the ramp) no more than 1:12? [ADA Standards § 4.7.2] *Note: 1:12 is one inch of vertical height for 12 inches of horizontal distance.*	Yes _____ No _____	
C1-f.	If the slope of part of the accessible route is more than 1:20, does it meet the following requirements for an accessible ramp?	Yes _____ No _____	

f-i. Is the running slope no greater than 1:12? [ADA Standards § 4.8.2] Yes _____ No _____

Note: For existing ramps, the slope may be 1:10 for a 6-inch rise and 1:8 for a 3-inch rise in special circumstances (see ADA Standards § 4.1.6(3)).

f-ii. Are handrails installed on both sides of each ramp segment? [ADA Standards § 4.8.5] Yes _____ No _____

f-iii. Is the ramp width, measured between the handrails, at least 36 inches? [ADA Standards § 4.8.3] Yes _____ No _____

f-iv. Does the ramp have a level landing at the top and bottom of each ramp section that is at least 60 inches long? [ADA Standards § 4.8.4] Yes _____ No _____

Note: The level landing may be part of the sidewalk or walking surface.

Notes/Comments

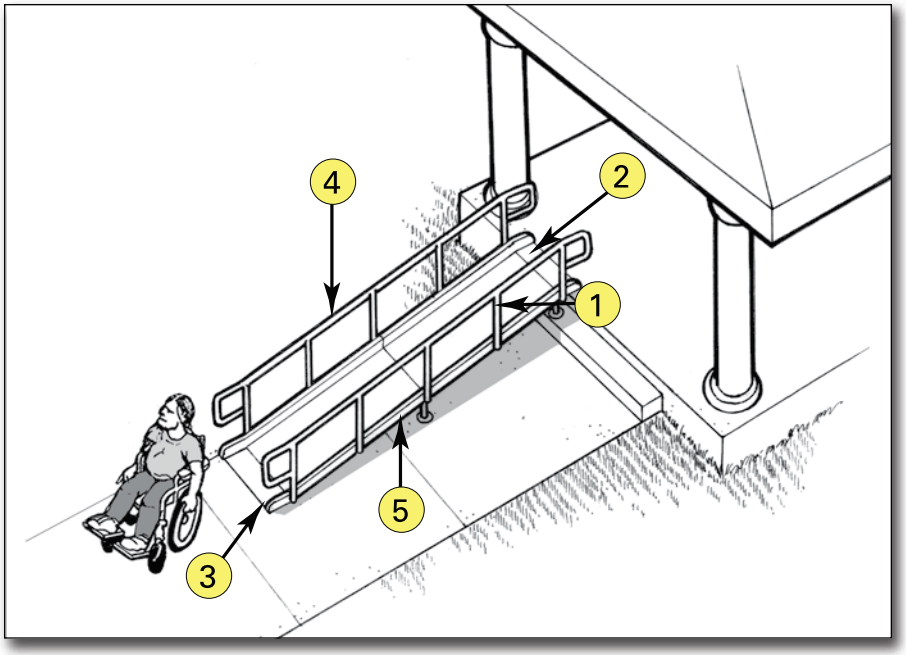

Notes:

1. At least 36 inches between handrails
2. Top landing part of walk
3. Bottom landing part of walk
4. Handrail height 34 to 38 inches
5. Edge protection.

			Notes/Comments
f-v.	If a ramp is more than 30 feet long, is a level landing at least 60 inches long provided at every 30 feet of horizontal length? [ADA Standards § 4.8.4] *Note: if the running slope is less than 1:16 but more than 1:20, each ramp segment may be up to 40 feet long followed by a level landing].*	Yes _____ No _____	
f-vi.	Is there a level landing, at least 60 inches x 60 inches, when a ramp changes direction? [ADA Standards § 4.8.4]	Yes _____ No _____	
f-vii.	Are the handrails mounted 34 to 38 inches above the ramp surface? [ADA Standards § 4.8.5]	Yes _____ No _____	
f-viii.	If the ramp or landing has a vertical drop-off on either side, is edge protection provided? [ADA Standards § 4.8.7]	Yes _____ No _____	

Temporary Solutions For Emergency Sheltering - Ramps

Problem: The sidewalk connecting parking to the shelter entrance is too steep to be accessible.

Suggestion: Check to see if there is another accessible route to the accessible entrance. Sometimes there is a less direct route that is accessible. During an evacuation it will be helpful to put up signs or to have volunteers stationed at the accessible parking spaces to direct people along this less direct, but nonetheless accessible, route.

Problem: The accessible route crosses a curb but no curb ramp is provided.

Suggestion: Install a portable ramp with a slope no steeper than 1:12 with edge protection. Store the portable ramp on site so it can be easily accessed in an emergency.

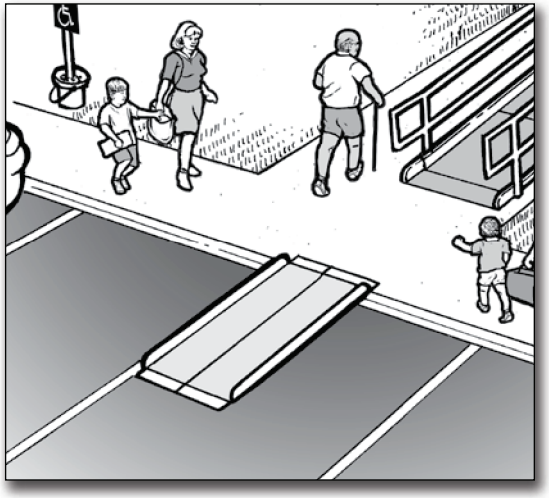

A portable ramp with edge protection is installed over a curb to provide an accessible route.

Problem: There are two steps where the sidewalk connects to the accessible entrance.

Suggestion: Install a portable ramp with a slope no steeper than 1:12 with edge protection and handrails on both sides of the ramp. Store the portable ramp and components on site so everything can be easily accessed in an emergency.

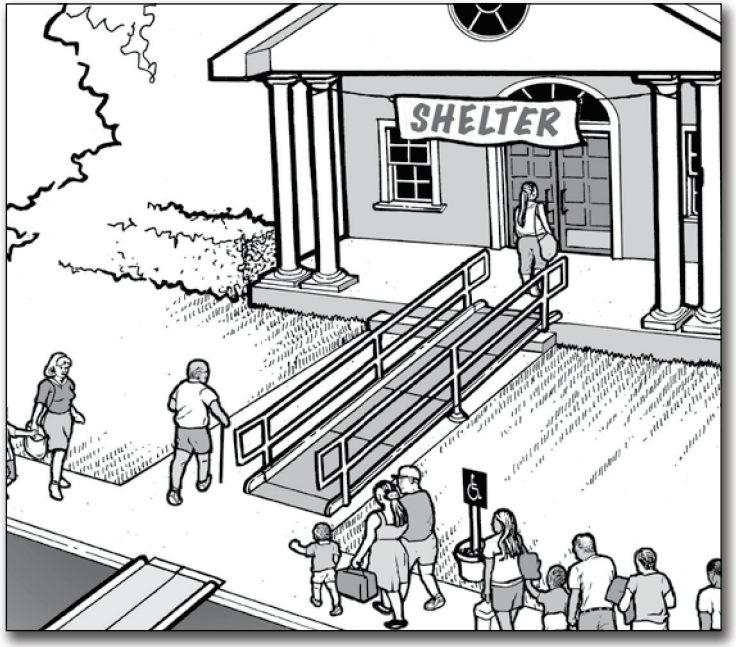

A portable ramp with edge protection and handrails is installed over two steps to provide an accessible route.

2. Typical Issues for Individuals Who Are Blind or Have Low Vision

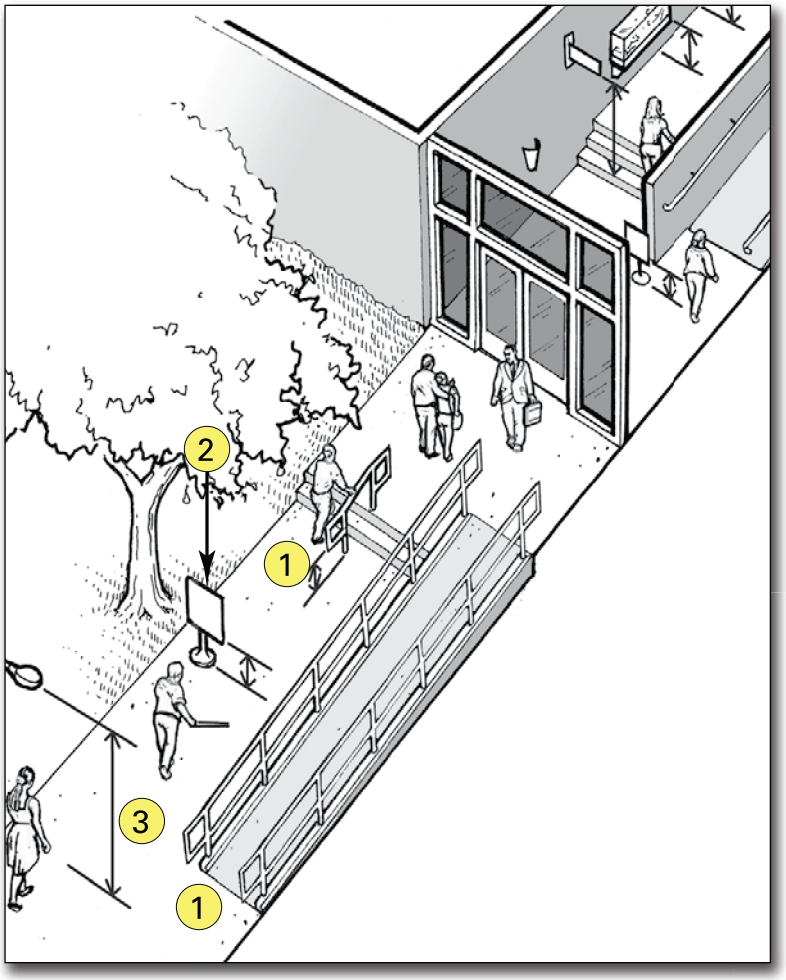

Common objects along pedestrian routes to a shelter that can be hazards to people who are blind or have low vision.

Objects that are wall mounted, that project into a pedestrian route from the side, or that are overhead can be hazards to people who are blind or who have low vision. These objects must be positioned so people will either detect the objects before they run into them or safely pass under them. Examples may include handrail extensions on stairs and ramps, post- or wall-mounted signs, drinking fountains, and low hanging tree limbs. Pedestrian routes open to people during the time that the facility is being used as an emergency shelter, such as sidewalks, courtyards, and plazas, must be free of overhanging objects that are less than 80 inches above the route. Objects more than 27 inches and less than 80 inches above the route and that protrude from the side more than 4 inches are also a hazard. Since people can walk on any sidewalk, not just the accessible routes, all exterior pedestrian routes serving or leading to the shelter areas must be checked. The following questions apply to sidewalks and walkways leading to the emergency shelter.

Notes:

1. The bottom of the handrail extensions turn down to 27 inches or less above the route so a person who is blind or has low vision can detect the hazard before running into it.

2. Signs or other objects in the pedestrian route can be a hazard if the bottom is more than 27 inches but less than 80 inches above the route.

3. Objects that overhang the pedestrian route must be at least 80 inches above the route.

C2-1. Are all sidewalks and walkways to the shelter free of any objects (e.g., wall-mounted boxes, signs, handrail extensions) with bottom edges that are between 27 inches and 80 inches above the walkway and that extend more than 4 inches into the sidewalk or walkway? [ADA Standards §§ 4.4, 4.2.1(3), 4.1.3(2)]

If No, can the object be lowered, removed, or modified or can the route be moved so that the object can be avoided?

Yes _____ No _____

C2-2. Are the undersides of exterior stairs enclosed or protected with a cane-detectable barrier so that people who are blind or have low vision will not hit their heads on the underside? [ADA Standards § 4.4.2]

If No, can a barrier or enclosure be added below the stair or can the route be relocated away from the stair?

Yes _____ No _____

When the underside of a stair is open, it is a hazard to people who are blind or have low vision. Enclosing the area below the stair or installing a cane-detectable barrier helps this woman to stop before hitting her head.

Notes/Comments

C2-3. Are all objects that hang over the pedestrian routes at least 80 inches above the route? [ADA Standards § 4.4.2]
If No, can the objects be removed or relocated, or can a cane detectable object be added below that is at no higher than 27 inches?

Yes _____ No _____

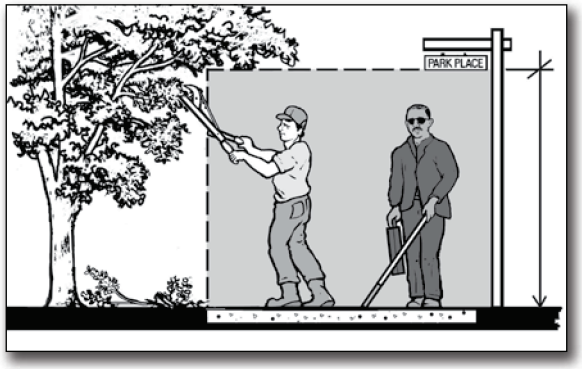

Overhead sign and tree branches are least 80 inches above the walk.

Notes/Comments

Temporary Solutions For Emergency Sheltering - Protruding Object Hazards

Problem: Objects protrude too far from the side into the route causing a hazard for people who are blind or who have low vision.

Suggestion: When people who are blind or who have low vision use a cane to detect hazards, objects located at 27 inches or lower are detectable. When an object is located higher than 27 inches above the ground it is a hazard if the object protrudes more than 4 inches into the circulation path. To make a protruding object cane detectable:

- Place an object below, or on either side of, the protruding object that is not higher than 27 inches above the ground.
- If the protruding object can be moved, lower the object so that its bottom is not more than 27 inches above the ground.
- Prune or alter the protruding object so it does not protrude above the route.

D. Entering the Emergency Shelter

Building Entrance

A shelter must have at least one accessible entrance that is on an accessible route. An accessible entrance must provide at least one accessible door with maneuvering space, accessible hardware, and enough clear width to allow people who use crutches, a cane, walker, scooter, or wheelchair to use it.

If the accessible entrance is not the main entrance to the facility that is being used as a shelter, signs must be located at inaccessible entrances to direct evacuees and volunteers to the accessible entrance. The accessible entrance must be unlocked when other shelter entrances are unlocked.

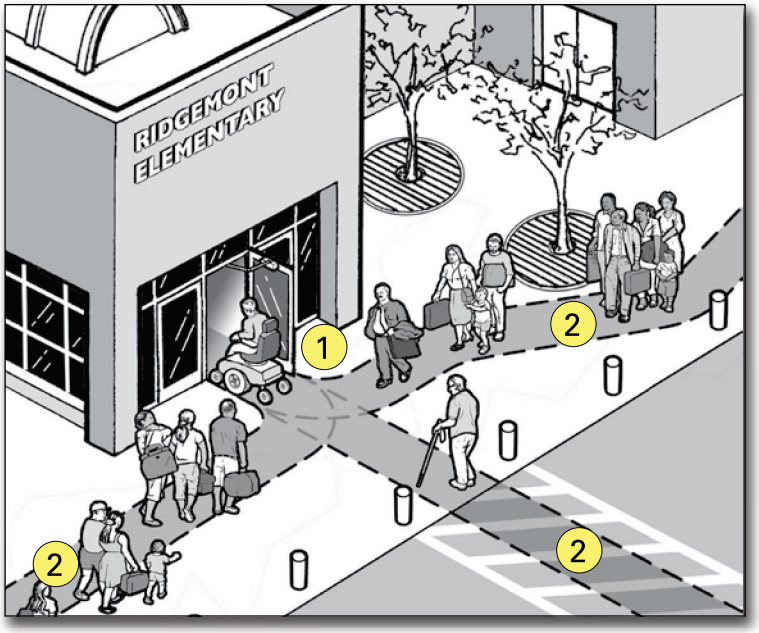

Notes:

1 Accessible entrance to the shelter.

2 Accessible route connecting accessible parking and drop-off area (if provided) to the accessible entrance.

Examples of signs for inaccessible shelter entrances directing people to the accessible entrance.

D1. Is there at least one accessible entrance connected to an accessible route? [ADA Standards § 4.1.3(1)] Yes _____ No _____

Notes: If this entrance is not the main entrance, it needs to be kept unlocked when other shelter entrances are unlocked.

If there are inaccessible entrances serving the shelter, signs will be needed at inaccessible entrance(s) to direct evacuees to the nearest accessible entrance.

D2. Does at least one door or one side of a double leaf-door provide at least 32 inches clear passage width when the door is open 90 degrees? [ADA Standards § 4.13.5] Yes _____ No _____

If No, does another entrance have an accessible door or can both doors be propped open during the evacuation? Other possible solutions are to enlarge the door opening, use a swing clear hinge, or, if a double-leaf door, replace with uneven width doors.

D3. Is the hardware (e.g., lever, pull, and panic bar) usable with one hand without tight grasping, pinching, or twisting of the wrist? [ADA Standards § 4.13.9] Yes _____ No _____

If No, leave door propped open, add new accessible hardware, or adapt/replace hardware.

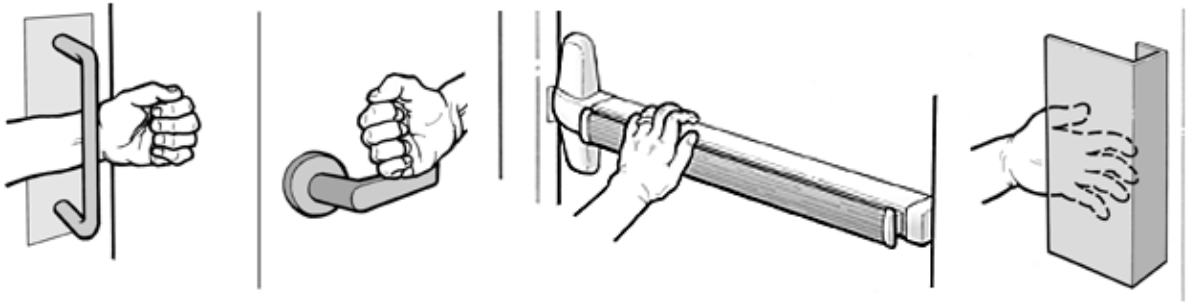

Examples of handles and door hardware that can be used without tight grasping, pinching, or twisting.

Notes/Comments

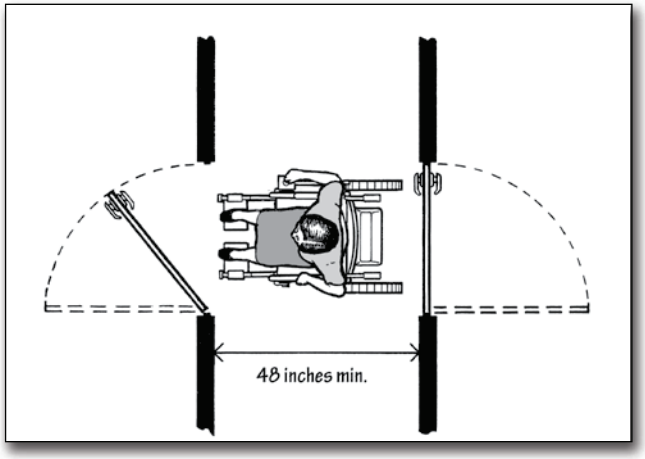

Minimum vestibule depth of 48 inches if both doors open out

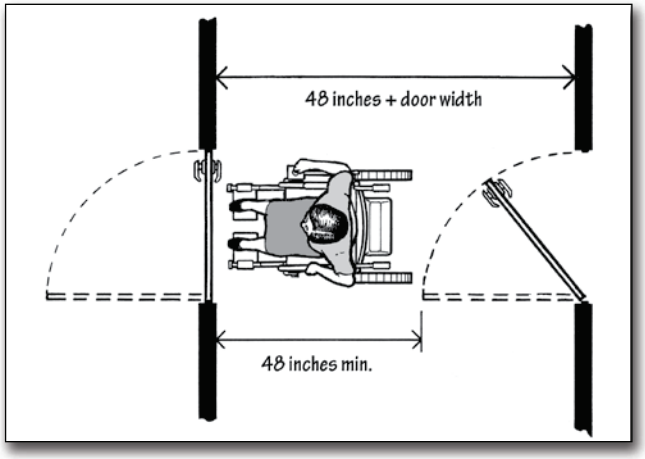

Minimum vestibule depth of 48 inches + door width when door swings into vestibule.

Notes/Comments

D4. On the latch, pull side of the door, is there at least 18 inches clearance provided if the door is not automatic or power-operated? [ADA Standards § 4.13.6, Fig. 25] Yes _____ No _____

If No, leave the door propped open or find another accessible entrance.

D5. If there is a raised threshold, is it no higher than 3/4 inch at the door and beveled on both sides? [ADA Standards §§ 4.1.6(3)(d)(ii), 4.13.8] Yes _____ No _____

If No, replace threshold with one with beveled sides or add a sloped insert.

D6. If an entry has a vestibule, is there a 30-inch by 48-inch clear floor space inside the vestibule where a wheelchair or scooter user can be outside the swing of a hinged door? [ADA Standards § 4.13.7] Yes _____ No _____

If No, leave the inner door permanently open, remove inner door, or modify the vestibule.

E. Hallways and Corridors

1. Typical Issues for Individuals Who Use Wheelchairs, Scooters, or Other Mobility Devices

The interior accessible route connects the accessible entrance with the various service and activity areas within the shelter. Typically made up of hallways, corridors, and interior rooms and spaces, the accessible route is essential for people who have difficulty walking or who use wheelchairs or other mobility aids to get to all of the service and activity areas of the shelter.

An accessible route is at least 36 inches wide and may narrow briefly to 32 inches wide where the route passes through doors or next to furniture and building elements. High thresholds, abrupt level changes, steps, or steep running or cross slopes cannot be part of an accessible route. Where ramps are used, they cannot be steeper than 1:12. Ramps with a vertical rise of more than 6 inches must have handrails on both sides. Ramps must also have edge protection to stop wheelchairs from falling off the sides, and level landings at the top and bottom of each segment and where a ramp changes direction.

Where an accessible route is different from the route used by most evacuees, signs will be needed at key decision points to direct individuals with disabilities to the various activity areas.

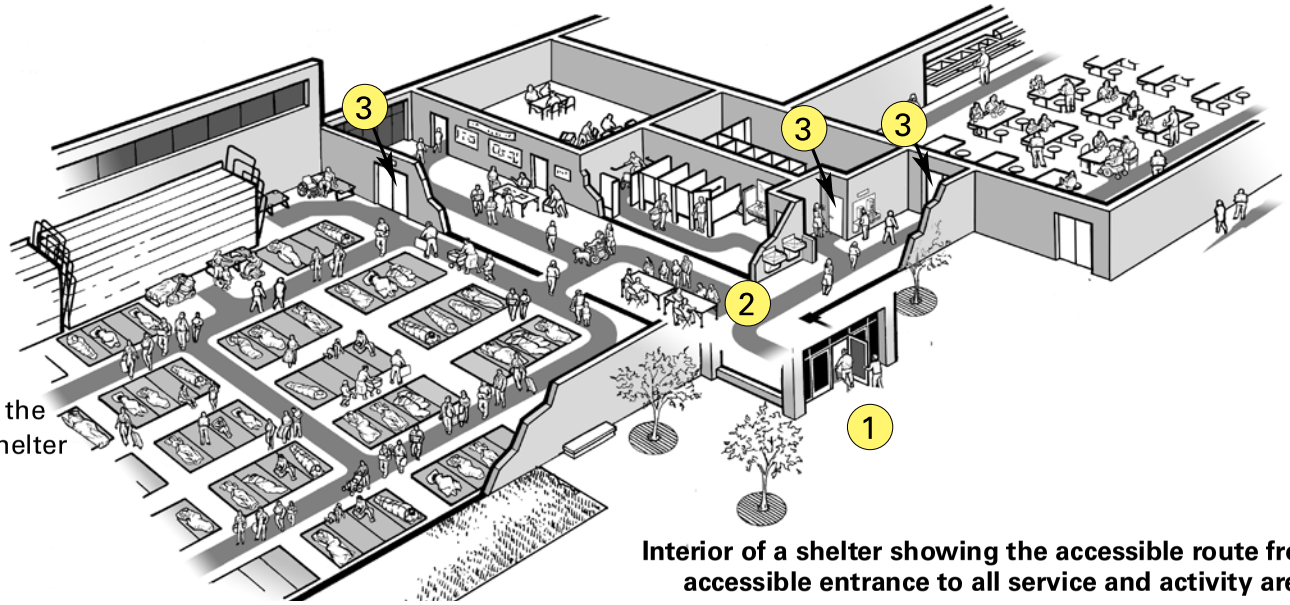

Notes:

1. Accessible Entrance
2. Accessible Route connects the accessible entrance with shelter service and activity area
3. Accessible door to service and activity areas

Interior of a shelter showing the accessible route from the accessible entrance to all service and activity areas.

			Notes/Comments
E1-a.	Is there an accessible route, at least 36 inches wide, that connects the accessible entrance to all shelter areas (it may narrow to 32 inches wide for up to 2 feet in length)? [ADA Standards § 4.3.2(3)]	Yes _____ No _____	
E1-b.	Is the accessible route free of steps and abrupt level changes over 1/2 inch? *Note: level changes between 1/4 inch and 1/2 inch should be beveled).* *[ADA Standards §§ 4.1.3(1), 4.3.8]*	Yes _____ No _____	
E1-c.	Does the accessible route from the accessible entrance to all activity areas change levels using a ramp, lift or elevator? [ADA Standards §§ 4.1.3(1), 4.3.8] If No, go to question E1-g.	Yes _____ No _____	
c-i.	If Yes, is a ramp or sloped hallway provided? If Yes, go to question E1-d.	Yes _____ No _____	
c-ii.	Is an elevator or lift provided? If Yes, and the elevator or lift is part of the accessible route to a shelter area, is back-up electrical power available to operate the elevator or lift for the duration of shelter operation should the normal electrical service be disrupted? If Yes and an elevator is provided, see question E1-e. If Yes and a lift is provided, see question E1-f. If No, then either provide back-up electrical power to operate the lift or elevator during the power outage or locate shelter services exclusively on accessible levels that may be reached by people with a mobility disability without using an elevator or lift.	Yes _____ No _____	

			Notes/Comments
E1-d.	Where the slope of the accessible route is greater than 1:20, does this area meet the following requirements for an accessible ramp?	Yes _____ No _____	
d-i.	Is the slope no greater than 1:12? [ADA Standards § 4.8.2] *Note: For existing ramps, the slope may be 1:10 for a 6-inch rise and 1:8 for a 3-inch rise in special circumstances]. [ADA Standards § 4.1.6(3)*	Yes _____ No _____	
d-ii.	Are handrails installed on both sides of each ramp segment? [ADA Standards § 4.8.5]	Yes _____ No _____	
d-iii.	Is the ramp width, measured between handrails, at least 36 inches? [ADA Standards § 4.8.3]	Yes _____ No _____	
d-iv.	Are the handrails mounted 34 to 38 inches above the ramp surface? [ADA Standards § 4.8.5]	Yes _____ No _____	
d-v.	If a ramp is longer than 30 feet, is a level landing at least 60 inches long provided every 30 feet? [ADA Standards § 4.8.4]	Yes _____ No _____	
d-vi.	Does the ramp have a level landing that is at least 60 inches long at the top and bottom of each ramp section or where the ramp changes direction? [ADA Standards § 4.8.4]	Yes _____ No _____	
d-vii.	If the ramp or landing has a vertical drop-off on either side of the ramp, is edge protection provided? [ADA Standards § 4.8.7]	Yes _____ No _____	

E1-e. Is an elevator provided to each of the levels on which each sheltering service or activity area is located? Yes _____ No _____

e-i. Are the centerlines of the call buttons mounted 42 inches above the floor? [ADA Standards § 4.10.3] Yes _____ No _____

e-ii. Does the floor area of the elevator car have space to enter, reach the controls, and exit? [ADA Standards § 4.10.9, Fig. 22] Yes _____ No _____

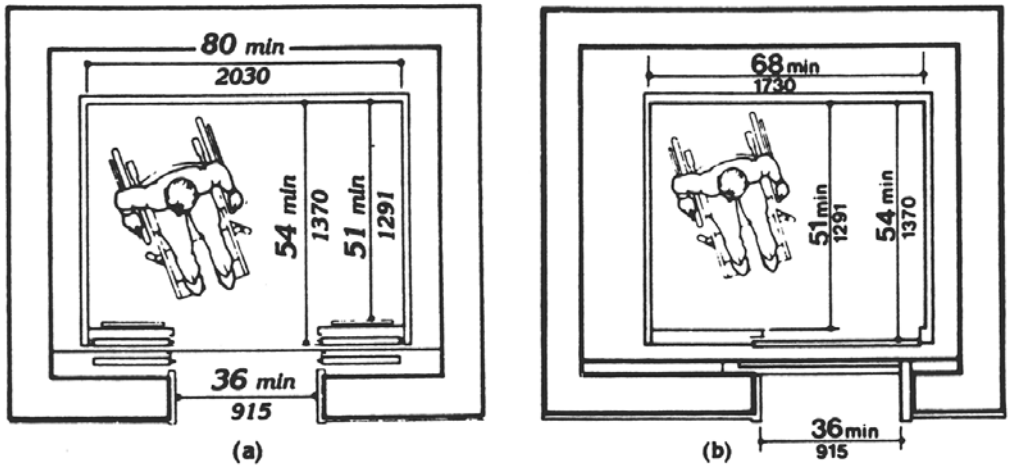

Fig. 22
Minimum Dimensions of Elevator Cars

Note: See Figure 22 for acceptable floor and opening dimensions. Floor dimensions of at least 48 inches by 48 inches may be allowed in existing facilities built before the ADA went into effect.

e-iii. Can the elevator be called and operated automatically without using a special key or having to turn on the elevator from a remote location? [ADA Standards § 4.10.2] Yes _____ No _____

Notes/Comments

			Notes/Comments
e-iv.	Are the highest floor control buttons mounted no more than 54 inches above the floor for a side reach or 48 inches for forward reach? [ADA Standards § 4.10.12 (3)]	Yes _____ No _____	
e-v.	Are raised letters and Braille characters used to identify each floor button and each control? [ADA Standards § 4.10.12]	Yes _____ No _____	
e-vi.	Are signs mounted on both sides of the elevator hoistway door opening (for each elevator and at each floor) that designate the floor with 2-inch minimum-height raised letters and Braille characters centered at 60 inches above the floor? [ADA Standards § 4.10.5]	Yes _____ No _____	
e-vii.	Is the elevator equipped with audible tones or bells or verbal annunciators that announce each floor as it is passed? [ADA Standards § 4.10.13]	Yes _____ No _____	
E1-f.	If a wheelchair lift is provided, does it meet the following?	Yes _____ No _____	
f-i.	Is the lift operational at the time of the survey? [ADA Standards § 4.11.3]	Yes _____ No _____	
f-ii.	Is the change in level from the floor to the lift surface ramped or beveled? [ADA Standards §§ 4.11.2, 4.5.2]	Yes _____ No _____	
f-iii.	Is there at least a 30-inch by 48-inch clear floor space on the wheelchair lift? [ADA Standards §§ 4.11.2, 4.2.4]	Yes _____ No _____	
f-iv.	Does the lift allow a person using a mobility device unassisted entry, operation (is key available, if required), and exit?	Yes _____ No _____	

			Notes/Comments
f-v.	Are the controls and operating mechanisms mounted no more than 54 inches above the floor for a side reach or 48 inches for a forward reach? [ADA Standards §§ 4.11.2, 4.27.3]	Yes _____ No _____	
f-vi.	Are the controls and operating mechanisms usable with one hand without tight grasping, pinching, or twisting? [ADA Standards §§ 4.11.2, 4.27.4]	Yes _____ No _____	
E1-g.	At each location on the way to each shelter activity area where the accessible route passes through a door, does at least one door meet the following requirements?	Yes _____ No _____	
g-i.	Is the clear width for the door opening at least 32 inches measured when the door is open 90 degrees? [ADA Standards §§ 4.1.3(7), 4.13.5]	Yes _____ No _____	
g-ii.	Is the door hardware (e.g., lever, pull, push, panic bar) usable with one hand, without tight grasping, pinching, or twisting of the wrist, to allow people who may not be able to easily use one or both hands to fully operate the hardware? [ADA Standards § 4.13.9]	Yes _____ No _____	

g-iii. Is there clear maneuvering floor space in front of each accessible door (see ADA Standards § Fig. 25) and, on the pull side, is there at least 18 inches clear floor space beyond the latch side of the door (see space configurations in Figure 25)? [ADA Standards § 4.13.6] Yes _____ No _____

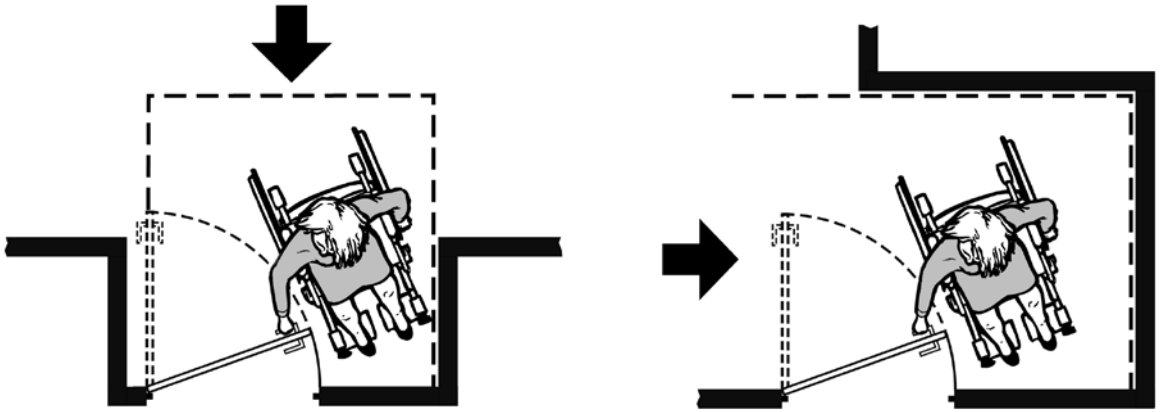

A clear floor space on the latch side of the door (pull side) allows a person using a wheelchair or scooter to pull the door open and then enter. The size of the clear floor space varies depending on the direction of approach (shown by the arrows) and the door swing.

g-iv. Is no more than 5 pounds force needed to push or pull open the door? [ADA Standards § 4.13.11 (2)(b)] Yes _____ No _____

Note: Fire doors are still considered to be accessible if they have the minimum opening force allowable by the appropriate administrative authority.

g-v. If the answers to questions g-ii thru g-iv are No, can the door be propped open? Yes _____ No _____

If an activity area is not on an accessible route and cannot be made accessible, find another area that is on an accessible route where that activity may be provided.

Notes/Comments

2. Typical Issues for People Who are Blind or Have Low Vision

Overhead and wall-mounted objects that may be hazards along a pedestrian route

Individuals who are blind or have low vision may walk along any route or through any shelter activity area, not just the accessible routes. That means any area where people using the shelter can walk, including hallways, corridors, eating areas, and sleeping areas, must be free of objects that cannot be detected by a person who is blind or has low vision. Objects that are wall mounted, that project into a pedestrian route from the side, or that are overhead must be located so that individuals who are blind or have low vision will either detect the objects before they run into them or safely pass under them. These routes must be free of overhanging objects that are less than 80 inches above the floor and side objects that protrude into the route more than 4 inches when the bottom of the object is more than 27 inches above the floor. Items to watch for include wall-mounted fire extinguishers and wall-mounted display cases when the bottom is more than 27 inches above the floor, wall sconces and light fixtures that protrude more than 4 inches off the wall, and open staircases, exit signs, overhead signs, banners, and arched doorways that are lower than 80 inches above the floor.

Notes:

1. Wall-mounted drinking fountains are a hazard when the front projects more than 4 inches beyond the wall and the bottom is more than 27 inches above the floor.
2. Wall-mounted objects cannot project more than 4 inches beyond the wall if the bottom is not in the cane-detectable area below 27 inches off the floor.
3. Overhead objects must be at least 80 inches off the floor.

The following questions apply to pedestrian routes serving or leading to the shelter activity and common use areas.

Notes/Comments

E2-a. Are pedestrian routes leading to or serving each service or activity area of the shelter free of objects that protrude from the side more than 4 inches into the route with the bottom of the object more than 27 inches above the floor? [ADA Standards § 4.4.1] Yes _____ No _____

Note: These objects may be wall mounted or free standing. Items to check include wall-mounted fire extinguishers, light fixtures, coat hooks, shelves, drinking fountains, and display cases.

E2-b. Are pedestrian routes leading to or serving each of the service or activity areas free of overhead objects with the bottom edge lower than 80 inches above the floor? [ADA Standards § 4.4.2] Yes _____ No _____

When the underside of a stair is open, it is a hazard to people who are blind or have low vision. Enclosing the area below the stair or installing a cane-detectable barrier helps the person to avoid the area.

E2-c. Are any interior stairs along these routes configured with a cane-detectable warning or a barrier that prevents travel into the area with less than an 80-inch high head clearance so that people who are blind or who have low vision cannot hit their heads on the underside or stair frame? [ADA Standards § 4.4.2] Yes _____ No _____

If No, list the objects that are a hazard and their location. Remove or relocate the object or place a detectable object on the floor below each object to remove the hazard.

F. Check-In Areas

A shelter usually has one or more check-in areas located near the entrance to the shelter. When check-in areas are provided, then at least one accessible check-in location should be provided. The accessible check-in area should be at the accessible entrance or signs should give directions to the accessible check-in area.

If a permanent reception counter is used for check-in, make sure to provide a writing surface at an accessible height for people who use a wheelchair, scooter, or other mobility device. This may be a part of the reception counter that is no higher than 36 inches above the floor, a folding shelf or an adjacent table, or a clip board.

An accessible check-in location using a folding table with a height that people who use wheelchairs can easily reach.

F1. Is there an accessible route that connects the accessible entrance to areas that are likely to be used to register people as they arrive at the shelter? [ADA Standards § 4.3] Yes _____ No _____

F2. If there is a built-in reception or other type of counter, does it have a section that is at least three feet long that is no higher than 36 inches above the floor or is there a nearby surface that is not higher than 36 inches above the floor? [ADA Standards § 7.2] Yes _____ No _____

Notes/Comments

Living at the Emergency Shelter

G. Sleeping Areas

Each accessible sleeping area needs to be on an accessible route connecting it to other activity areas in the shelter, including toilet rooms and bathing areas. An accessible route with adequate circulation and maneuvering space provides access in the sleeping areas for people who use wheelchairs or scooters and this route serves each accessible bed or cot.

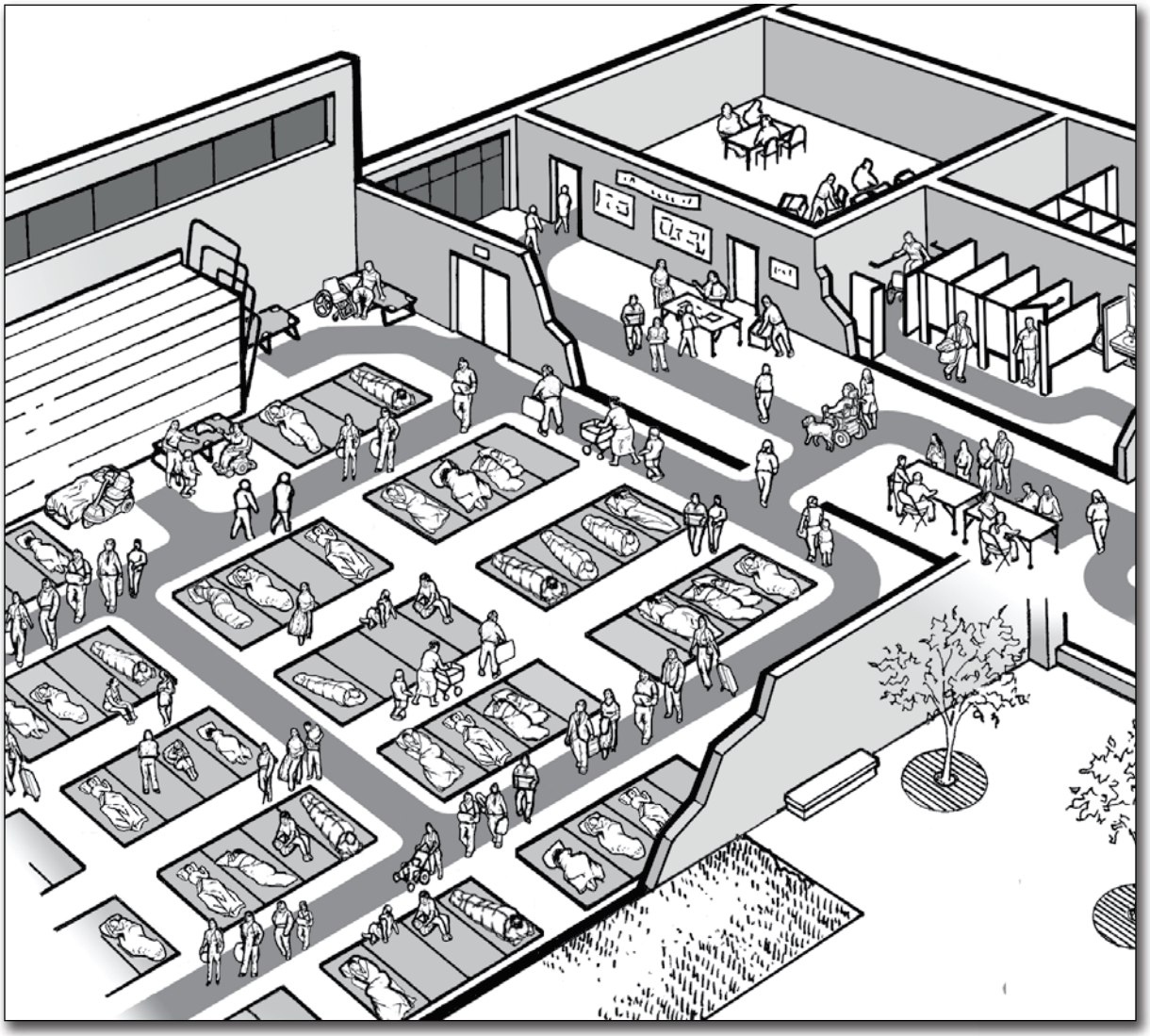

Interior of one section of a shelter's sleeping area. The shaded pathway indicates the accessible route, which provides access to accessible beds, cots, and other activity areas in the space plus the toilet rooms and other activity areas in the shelter.

Accessible cots have a sleeping surface at approximately the same height above the floor as the seat of a wheelchair (17 to 19 inches above the floor). When placed in several sections of the sleeping area, individuals who use a wheelchair, scooter, or other mobility device will be able to sleep near their family or other companions. An accessible route is needed to provide access to each accessible cot and a clear space at least 36 inches wide is needed along the side of the cot to make it possible to transfer between the mobility device and the cot. A preferred location for accessible cots is to have one side against a wall. This helps to stabilize the cot and the wall can act as a backrest when the person sits up on the cot.

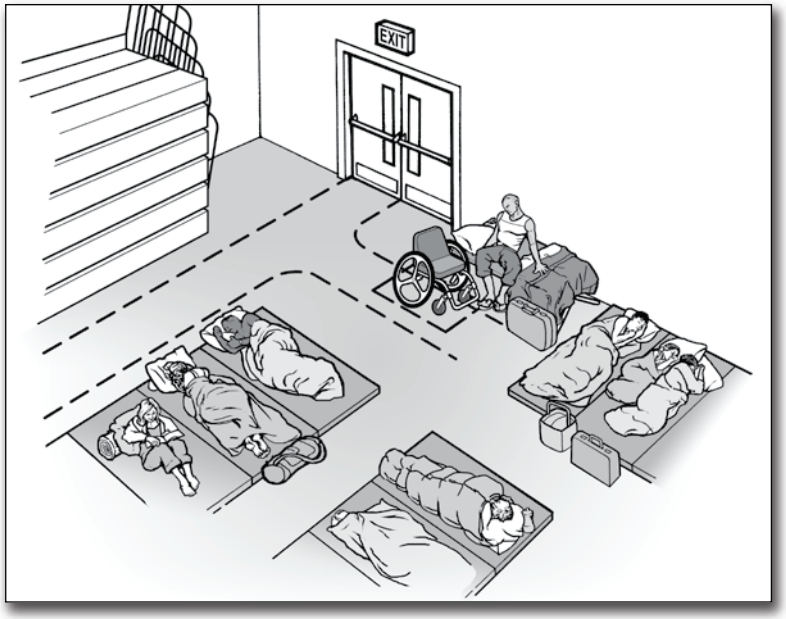

An accessible cot positioned against a wall. Dashed lines indicate the accessible route and clear floor space next to the cot.

Notes/Comments

G1. Is there an accessible route, at least 36 inches wide, that connects each sleeping area with other shelter activity areas? Yes _____ No _____

Note: it may narrow to 32 inches wide for up to 2 feet in length.

[ADA Standards § 4.3.2(3)]

G2. Is the accessible route free of steps and abrupt level changes over 1/2 inch? Yes _____ No _____

Note: level changes between 1/4 inch and 1/2 inch should be beveled.

[ADA Standards §§ 4.1.3(1), 4.3.8]

Note: Although the facility survey cannot check the accessibility of the cots because they will not be installed until the shelter is in use, planning for setting up the sleeping area and for arranging the cots and mats should include providing space for an accessible route and clear floor space at each accessible cot. Cots used by people who are blind or who have low vision should be in an easily locatable area.

H. Restrooms and Showers

Notes/Comments

At least one set of toilet rooms serving the shelter must be accessible to individuals who use a wheelchair, scooter, or other mobility device. In large shelters where more than one set of toilet rooms is needed to serve the occupants, it may be necessary to provide additional accessible toilet facilities or to establish policies to assure that individuals with disabilities have access to the accessible facilities.

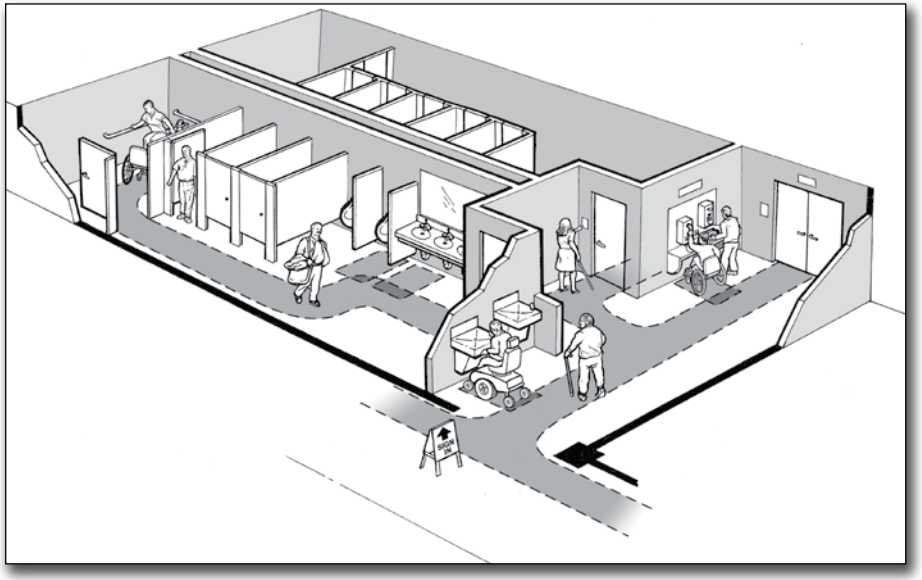

Interior of an accessible toilet room showing accessible route, clear floor space at accessible fixtures, and the wide accessible toilet stall.

H1. If a sign is provided at the toilet room entrance (e.g. Men, Women, Boys, Girls, etc.), is a sign with raised characters and Braille mounted on the wall adjacent to the latch? [ADA Standards § 4.30.6] Yes _____ No _____

If No, install a sign with raised characters and Braille on the wall adjacent to the latch side of the door and centered 60 inches above the floor and leave the existing sign in place on the door if removing it will damage the door.

Note: an additional sign may be mounted on the toilet room door but this cannot be considered to be the accessible sign which must be mounted on the wall adjacent to the latch side of the door.

			Notes/Comments
H2.	Does the door to the toilet room provide at least 32 inches clear passage width when the door is open 90 degrees? [ADA Standards § 4.13.5]	Yes _____ No _____	
H3.	Is the hardware (e.g., lever, pull, panic bar) usable with one hand without tight grasping, pinching, or twisting of the wrist? [ADA Standards § 4.13.9] If No, can the door be propped open without compromising privacy, or can the hardware be modified by adding new accessible hardware, or adapting or replacing hardware?	Yes _____ No _____	
H4.	On the pull side of the door, is there at least 18 inches clearance provided on the latch side if the door is not automatic or power-operated? [ADA Standards § 4.13.6, Fig. 25]	Yes _____ No _____	
H5.	If there is a raised threshold, is it no higher than 3/4 inch at the door and beveled on both sides? [ADA Standards §§ 4.1.6(3)(d)(ii), 4.13.8] If No, replace threshold with one with beveled sides or add a sloped insert.	Yes __ No___ NA__	
H6.	If the entry has a vestibule, is there a 30-inch by 48-inch clear floor space inside the vestibule where a wheelchair or scooter user can be outside the door swing? [ADA Standards § 4.13.7] If No, possible solutions include leaving the inner door open or removing the outer door.	Yes _____ No _____	

H7. Inside the toilet room, is there an area where a person who uses a wheelchair or other mobility device can turn around - either at least a 60-inch diameter circle or a "T"-shaped turn area as shown in the figures below? [ADA Standards §§ 4.22.3; 4.2.3] Yes _____ No _____

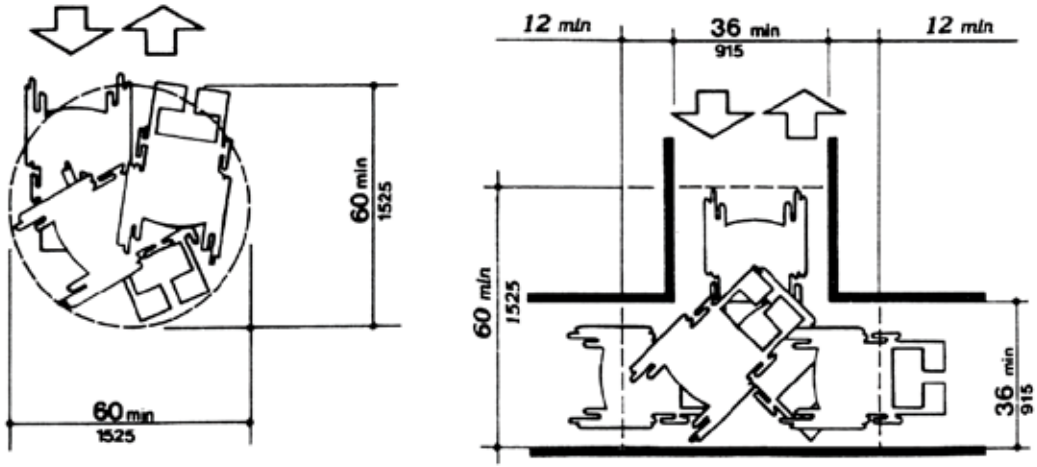

Minimum spaces for turning

H8. If lavatories are provided, does at least one have at least a 29 inch high clearance under the front apron with the top of the rim no more than 34 inches above the floor? [ADA Standards § 4.19.2] Yes _____ No _____

H9. Are the drain and hot water pipes for this lavatory insulated or otherwise configured to protect against contact? [ADA Standards § 4.19.4] Yes _____ No _____

Notes/Comments

			Notes/Comments
H10.	Does this lavatory have controls that operate easily with one hand, without tight grasping, pinching, or twisting of the wrist? [ADA Standards § 4.19.5]	Yes _____ No _____	
H11.	If mirrors are provided, is the bottom of the reflecting surface for the mirror at this lavatory no higher than 40 inches above the floor or is a full length mirror provided? [ADA Standards § 4.19.6]	Yes _____ No _____	
H12.	For at least one of each type of dispenser, receptacle, or equipment, is there clear floor space at least 30 inches wide x 48 inches long adjacent to the control or dispenser (positioned either parallel to the control or dispenser or in front of it)? [ADA Standards §§ 4.23.7; 4.27.2; 4.2.5 and Fig 5; 4.2.6 and Fig 6]	Yes _____ No _____	
H13.	Is the operating control (switch, lever, button, or pull) of at least one of each type of dispenser or built-in equipment no higher than 54 inches above the floor (if there is clear floor space for a parallel approach) or 48 inches (if there is clear floor space for a front approach)? [ADA Standards §§ 4.23.7; 4.27.3; 4.2.5 and Fig 5; 4.2.6 and Fig 6]	Yes _____ No _____	
H14.	Are all built-in dispensers, receptacles, or equipment mounted so the front does not extend more than 4 inches from the wall if the bottom edge is between 27 inches and 80 inches above the floor? [ADA Standards §§ 4.23.7; 4.27; 4.4.1; Fig. 8]	Yes _____ No _____	

Notes/Comments

Toilet Stalls

H15. Is at least one wide toilet stall provided with an outswinging door, side and rear grab bars, and clear space next to the toilet? [ADA Standards § 4.17] Yes _____ No _____

If No, check to see if another toilet room provides a wide accessible toilet stall, note its location for shelter planners, and answer all toilet room questions with respect to that toilet room.

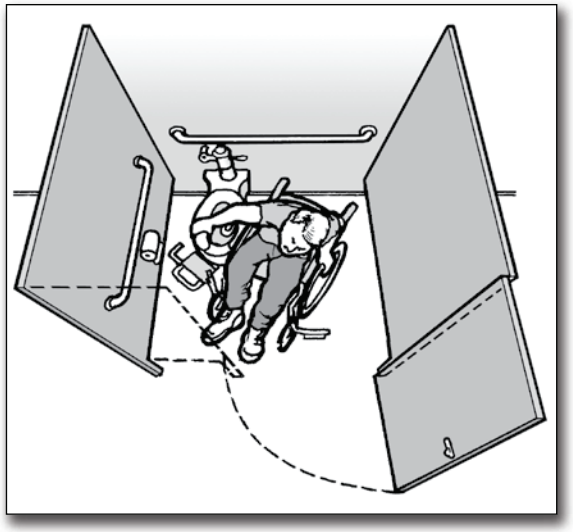

Overhead view of an individual using a wheelchair positioned beside a toilet in a wide accessible stall.

H16. Is the toilet stall at least 60 inches wide and 56 inches deep (wall mounted toilet) or 59 inches deep (floor mounted toilet)? [ADA Standards § 4.17.3] Yes _____ No _____

If No, note the width and depth of the stall. _____

H17. Is at least 9 inches of toe clearance provided under the front wall and at least one side wall of the toilet stall? [ADA Standards § 4.17.4] Yes _____ No _____

H18. Is the centerline of the toilet 18 inches from the adjacent side wall? [ADA Standards § 4.16.2; 4.17.3] Yes _____ No _____

H19. Is the top of the toilet seat 17 inches to 19 inches above the floor? [ADA Standards § 4.16.3] Yes _____ No _____

H20. Is the flush valve located on the wide side adjacent to the lavatory or is an automatic flush valve provided? [ADA Standards § 4.16.5] Yes _____ No _____

H21. Is a horizontal grab bar at least 40 inches long securely mounted on the adjacent side wall 33 to 36 inches above the floor with one end no more than 12 inches from the back wall 33 to 36 inches above the floor? [ADA Standards § 4.16.4; 4.17.6] Yes _____ No _____

H22. Is a second horizontal grab bar at least 36 inches long securely mounted on the back wall with one end no more than 6 inches from the side wall 33 to 36 inches above the floor? [ADA Standards § 4.16.4; 4.17.6] Yes _____ No _____

H23. Is the door to the toilet stall located diagonally opposite, not directly in front of, the toilet or on the opposite side wall from the wall with the long grab bar? [ADA Standards § 4.17.3] Yes _____ No _____

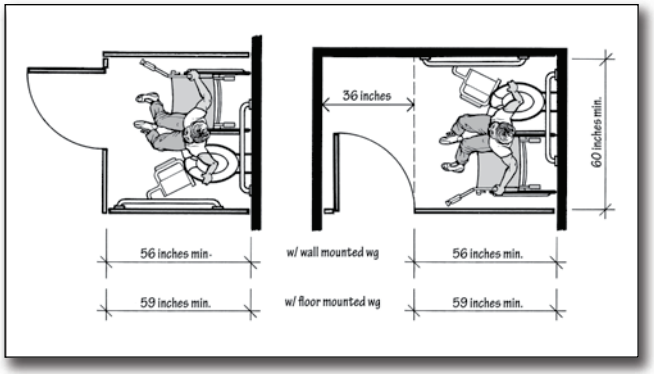

Plan views showing minimum sizes of wide accessible toilet stall

H24. Unless the wide stall is located at the end of a row of toilet stalls, does the door to this wider stall open out? [ADA Standards § 4.17.3] Yes _____ No _____

Notes/Comments

			Notes/Comments
H25.	Is the clear width of the door at least 32 inches (measured between the face of the door and the edge of the opening) when the door is open 90 degrees? [ADA Standards § 4.13.5]	Yes _____ No _____	
H26.	If there are 6 or more stalls in the restroom, is one of those stalls (in addition to the wider stall noted above) exactly 36 inches wide with an outswinging stall door that provides at least 32 inches of clear width? [ADA Standards § 4.22.4]	Yes _____ No _____	
H27.	Does this 36-inch wide stall have horizontal grab bars on both of the side partitions that are at least 36 inches long and 33 to 36 inches above the floor? [ADA Standards § 4.22.4]	Yes _____ No _____	
H28.	Is the surface of the toilet seat in this 36-inch-wide stall 17 to 19 inches above the floor? [ADA Standards §§ 4.16.3; 4.22.4]	Yes _____ No _____	
H29.	If a coat hook is provided is it mounted no higher than 54 inches above the floor for a side approach or 48 inches above the floor for a front approach? [ADA Standards § 4.25.3]	Yes _____ No _____	

Note:
For many emergency shelters, evacuees are not expected to use shower or bathing facilities due to the short period they may stay at the shelter. If planning for the shelter operation includes offering shower or bathing facilities, then those facilities should be on an accessible route and checked for accessibility. For information on the requirements for accessible showers or bathtubs see the ADA Standards for Accessible Design which is available online at www.ada.gov.

The following are figures illustrating some accessible shower features from the ADA Standards.

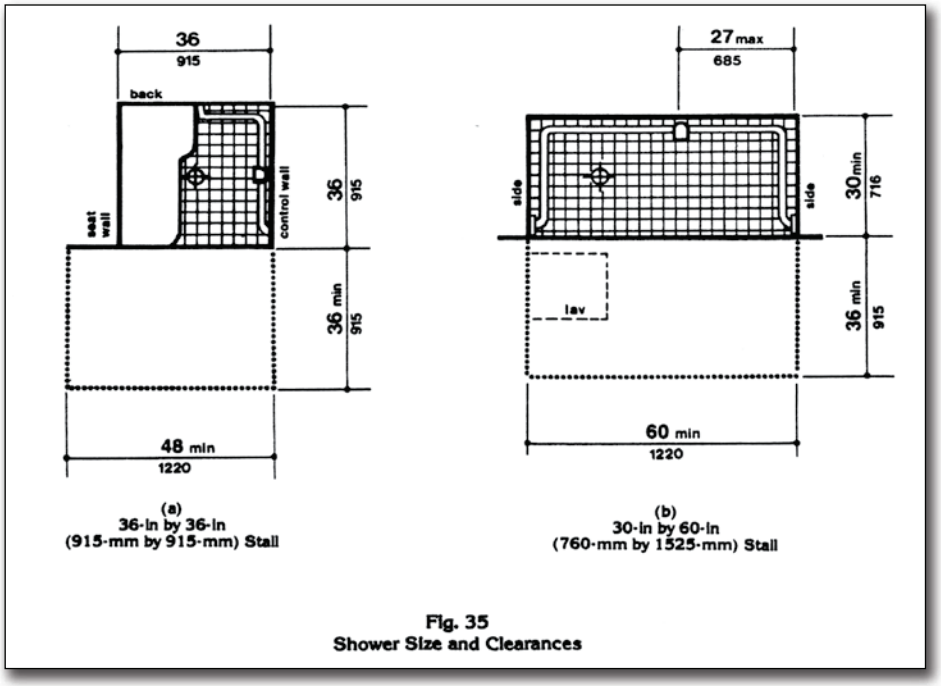

Accessible Shower Stall Minimum Size and Clearances

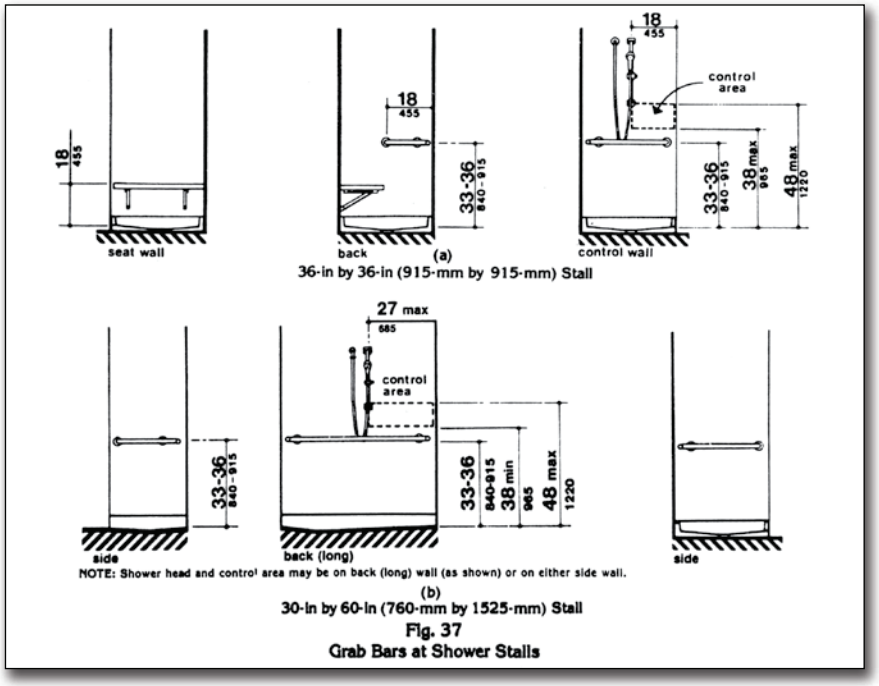

Accessible Shower Stall Grab Bars and Seat, Shower, and Control Area

I. Public Telephones

Notes/Comments

When public telephones are provided, then one or more accessible public telephones should be provided in areas serving shelter activity and service areas. Whenever accessible telephones are provided, each should be on an accessible route. In shelters it is common to provide additional telephones on tables or desks and some of these telephones should be accessible.

A text telephone (also commonly known as a TTY) is a device that allows individuals who are deaf or hard of hearing or who have a speech disability to communicate over a telephone. Having at least one TTY in any building that has at least four pay phones, provides access for people who are deaf or hard of hearing.

I1. If at least one public telephone or one bank of telephones is provided, does at least one of each type of telephone (e.g., pay telephone, intercom telephone, other telephone) have the following? Yes _____ No _____

I1a. For a side approach (clear floor space at least 30 inches long x 48 inches wide), is the coin slot no higher than 54 inches above the floor? [ADA Standards § 4.31.2, Fig. 44 (a)] Yes _____ No _____

I1b. For a front approach (where clear floor space at least 30 inches wide x 48 inches long), is the coin slot no higher than 48 inches above the floor? [ADA Standards § 4.31.2, Fig. 44 (b)] Yes _____ No _____

I2. Does the phone have volume controls? [ADA Standards § 4.31.5] Yes _____ No _____

I3. If three or more telephones are located in one bank serving the shelter, are a shelf and an electrical outlet provided at one telephone for use of a portable TTY? [ADA Standards § 4.31.9 (2)] Yes _____ No _____

I4. If four or more pay telephones are provided on the site, is there a TTY (text telephone) provided at the shelter? Yes ____ No _____
If yes, location:
_____

I5. Is there a sign at each pay phone or pay phone bank for the shelter directing people to the nearest TTY? [ADA Standards § 4.30.7 (3); 4.31.9(3)] Yes _____ No _____

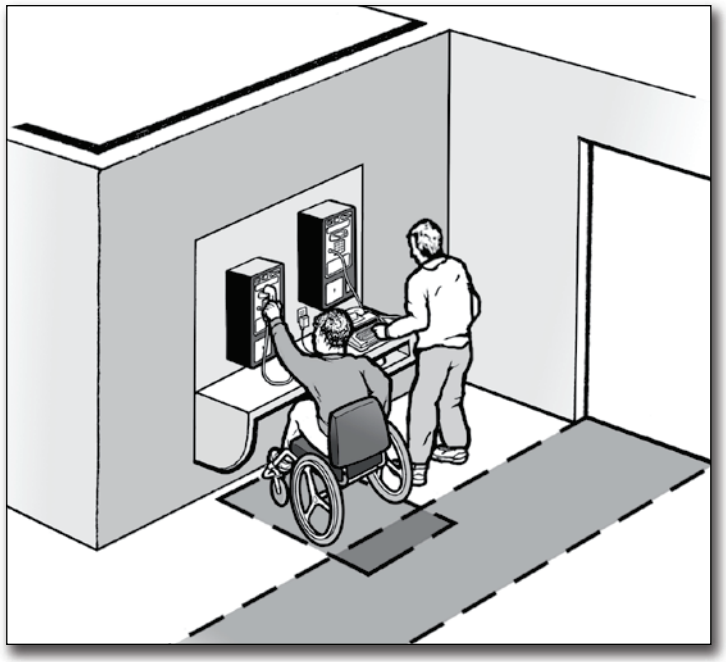

A bank of two public telephones. The accessible telephone is on the left and the telephone on the right is equipped with a TTY.

Notes/Comments

J. Drinking Fountains

Approximately 50% of the drinking fountains serving the shelter must be accessible and located on an accessible route. Accessible drinking fountains must have enough space for a person using a wheelchair, scooter, or other mobility device to use the drinking fountain. The spout and controls of the drinking fountain must be near the front edge. The controls must be usable with one hand without tight grasping, pinching, or twisting of the wrist. The other 50% of drinking fountains serving the shelter must be configured for use by people who have difficulty bending or stooping while standing.

When an object, such as a drinking fountain, protrudes more than four inches into the circulation path, the bottom edge must be at 27 inches above the floor or lower so the drinking fountain is not a hazard to people who are blind or have low vision.

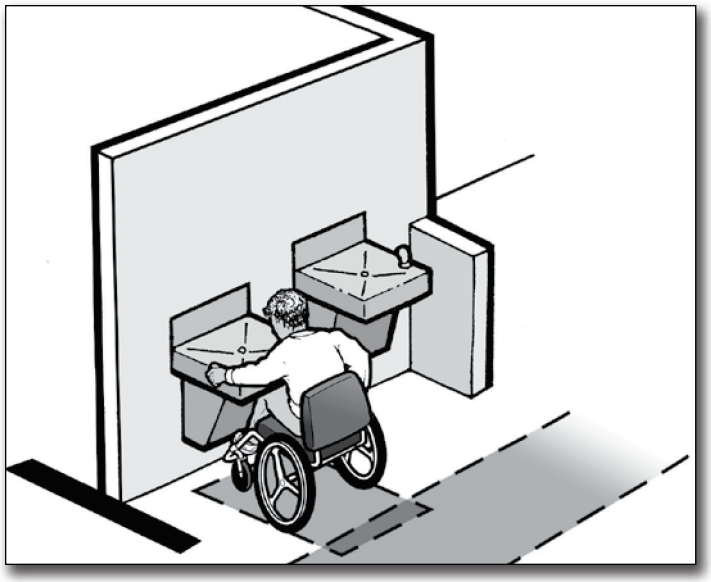

A person who uses a wheelchair is drinking from an accessible drinking fountain. Beside the accessible drinking fountain is a standard height fountain that is usable by people who have difficulty bending or stooping. The short wall beside the standard height drinking fountain is cane detectable to guide people who are blind or have low vision away from the standard height fountain which, otherwise, would be a protruding object hazard.

Notes/Comments

The following questions apply to 50% of the drinking fountains that are provided.

			Notes/Comments
J1.	If the drinking fountain is a wall-mounted unit, is there clear floor space at least 30 inches wide (36 inches if it is in an alcove) x 48 inches long in front of the drinking fountain and at least 27 inches high under the fountain so that a person using a wheelchair can get close to the spout and controls? [ADA Standards § 4.15.5 (1), Figs. 4 (e) and 27 (b)]	Yes _____ No _____	
J2.	If the drinking fountain is a floor-mounted unit, is there clear floor space at least 30 inches long x 48 inches wide (60 inches if it is in an alcove) for a side approach to the drinking fountain so that a person using a wheelchair can get close to the spout and controls even though the fountain has no clear space under it? [ADA Standards § 4.15.5 (2), Figs. 4 (e), 27 (c) and (d)]	Yes _____ No _____	
J3.	Is the top of the spout no higher than 36 inches above the floor and at the front of the fountain or water cooler? [ADA Standards § 4.15.2]	Yes _____ No _____	
J4.	Does the water rise at least 4 inches high when no more than 5 pounds of force is applied to the controls of the fountain? [ADA Standards §§ 4.15.3 and 4.15.4]	Yes _____ No _____	
J5.	Are the controls on or near the front of the unit and do they operate with one hand without tight grasping, pinching, or twisting of the wrist? [ADA Standards § 4.15.4]	Yes _____ No _____	
J6.	Is the bottom of the apron of the fountain 27 inches above the floor so that it provides the space needed for a person who uses a wheelchair to pull up under it but is not a hazard to people who are blind or have low vision and use a cane to detect hazards? [ADA Standards §§ 4.15.5 (1) and 4.4.1]	Yes _____ No _____	

K. Eating Areas

Notes/Comments

An accessible route, at least 36 inches wide and without steps or steep slopes, must be provided to and throughout the food service and eating areas of the shelter. The accessible route allows people who use wheelchairs, scooters, and other mobility devices to get to all of the food and drink items in the shelter and to accessible tables and seating.

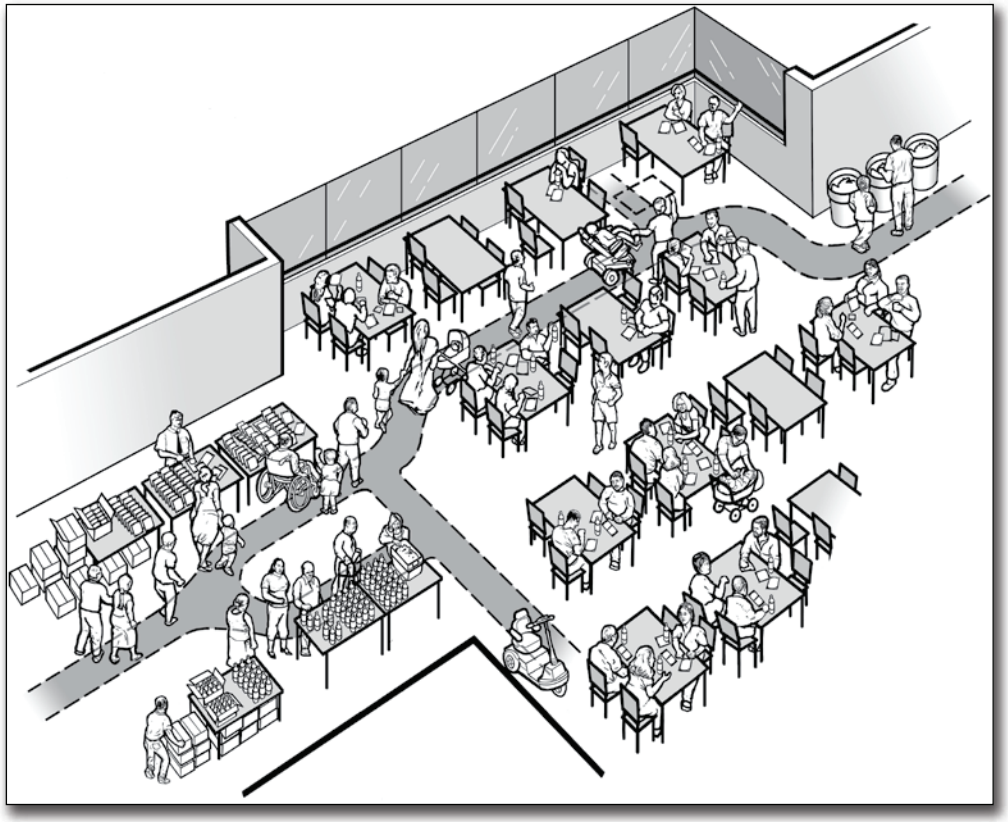

A serving and eating area in a shelter are shown above. The shaded pathway illustrates the accessible route connecting the entrance, serving areas, accessible seats and tables, and the exit.

			Notes/Comments
K1.	Is there an accessible route, at least 36 inches wide, that connects each of the shelter activity areas with the food service and eating areas (it may narrow to 32 inches wide for up to 2 feet in length)? [ADA Standards § 4.3.2(3)]	Yes _____ No _____	
K2.	Is there an accessible route that is at least 36 inches wide that connects accessible tables with serving, condiment, and dispenser areas? [ADA Standards § 5.3; 4.3.8]	Yes _____ No _____	
K3.	In each eating area, if tables with fixed seats are provided, do at least 5% of each type of table with fixed seats have accessible locations with knee space at least 27 inches high, at least 19 inches deep, and at least 30 inches wide with a table top 28 to 34 inches above the floor? [ADA Standards § 5.1] *Note: If movable tables and chairs are used as shown, then locate at least 5% of the tables adjacent to an accessible route. Tables can be relocated as needed during operation of the shelter.*	Yes _____ No _____	
K4.	If built-in food, drink, condiment, and tableware dispensers are provided, are dispensers and operating controls mounted no higher than 54 inches above the floor if clear floor space is provided for a side approach? [ADA Standards § 5.5]	Yes _____ No _____	
K5.	If the operating controls are set back 10 to 24 inches from the front edge of the counter or table are they no higher than 46 inches above the floor? [ADA Standards § 5.5]	Yes _____ No _____	
K6.	If food service lines are provided, is an accessible route provided (at least 36 inches wide) and are the tray slides no higher than 34 inches above the floor? [ADA Standards § 5.5]	Yes _____ No _____	

OTHER ISSUES

L. Availability of Electrical Power

Emergency shelters should have a way to provide a back-up power supply when the electrical service is interrupted. The back-up power is needed to provide refrigeration of medicines, operation of supplemental oxygen and breathing devices, and for charging the batteries of power wheelchairs and scooters. Individuals whose medications (certain types of insulin, for example) require constant refrigeration need to know if a shelter provides supplemental power for refrigerators or ice-packed coolers. Individuals who use medical support systems, such as supplemental oxygen, or who require periodic breathing treatments using powered devices rely on a stable source of electricity. These individuals must have access to electric power from a generator or other source of electricity while at a shelter.

In general, in each community or area where a shelter is provided, a facility must have one or more back-up generators or other sources of electricity so that evacuees with a disability who rely on powered devices can have access to electrical power while at the shelter.

L1. Is there a backup source of electrical power for the facility? Yes _____ No _____

L2. Is there a refrigerator or other equipment, such as coolers with a good supply of ice, at the shelter? Yes _____ No _____

Notes/Comments

M. Single-User or "Family" Toilet Room

Notes/Comments

In many schools and large facilities where emergency shelters are often located, single-user toilet rooms may be provided for staff. In those facilities built or altered since the ADA went into effect, single-user toilet rooms should have accessible features that could be useful during shelter operation. These features include an accessible entrance and turning and maneuvering spaces. These rooms should also have been built to allow grab bars, accessible controls, and accessible hardware to be easily installed.

As part of the planning for operating an emergency shelter, facilities operators should consider using an available staff toilet room, if provided, as a single-user or "family" toilet room. When provided in addition to large accessible toilet rooms, this type of facility permits a person with a disability to receive assistance from a person of the opposite sex.

M1. If a sign is provided at the toilet room entrance (e.g. Men, Women, Boys, Girls, etc.), is a sign with raised characters and Braille mounted on the wall adjacent to the latch side of the door and centered 60 inches above the floor? [ADA Standards § 4.1.3(16)(a)] Yes _____ No _____

If No, install a sign with raised characters and Braille on the wall adjacent to the latch side of the door and centered 60 inches above the floor and leave the existing sign in place on the door if removing it will damage the door.

Note: an additional sign may be mounted on the toilet room door but this cannot be considered to be the accessible sign which must be mounted on the wall adjacent to the latch side of the door.

M2. Does the door to the toilet room provide at least 32 inches clear passage width when the door is open 90 degrees? [ADA Standards § 4.13.5] Yes _____ No _____

M3. Is the hardware (e.g., lever, pull, etc.) usable with one hand without tight grasping, pinching, or twisting of the wrist? [ADA Standards § 4.13.9] Yes _____ No _____

If No, add new accessible hardware or adapt/replace hardware.

M4. On the latch, pull side of the door, is there at least 18 inches clearance provided if the door is not automatic or power operated? [ADA Standards § 4.13.6; Fig. 25] Yes _____ No _____

M5. If there is a raised threshold, is it no higher than 3/4 inch at the door and beveled on both sides? [ADA Standards §§ 4.1.6(3)(d)(ii); 4.13.8] Yes _____ No _____

If No, replace threshold with one with beveled sides or add a sloped insert.

M6. Inside the room is there an area for a person who uses a wheelchair to turn around - either a 60-inch diameter circle or a "T"-shaped turn area? [ADA Standards §§ 4.22.3; 4.2.3] Yes _____ No _____

M7. If the door swings into the room, does the door swing not overlap the required clear floor space for the toilet or lavatory? [ADA Standards §§ 4.22.2; 4.2.4.1] Yes _____ No _____

Note: In the figure below the clear floor space for the toilet extends at least 66 inches from the back wall.

M8. Is there at least 18 inches between the center of the toilet and the side of the adjacent lavatory? [ADA Standards § 4.16.2; Fig. 28] Yes _____ No _____

M9. Does the lavatory have at least a 29-inch-high clearance under the front edge and the top of the rim no more than 34 inches above the floor? [ADA Standards § 4.19.2] Yes _____ No _____

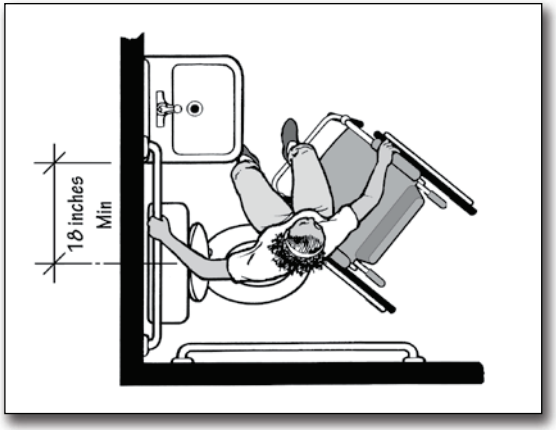

Plan view showing the minimum amount of space required between the toilet and the adjacent lavatory.

Notes/Comments

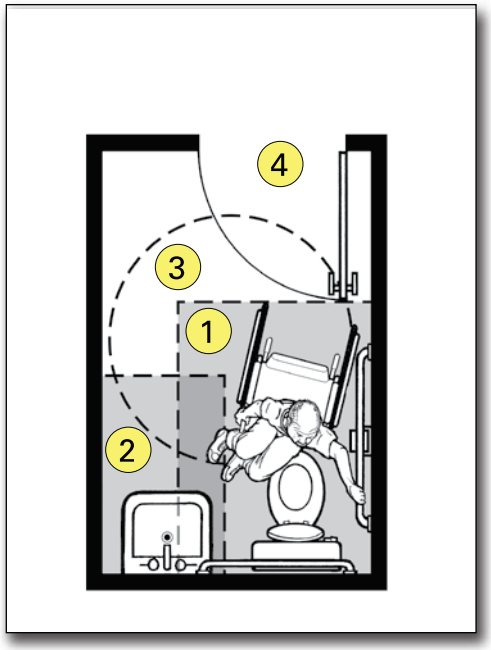

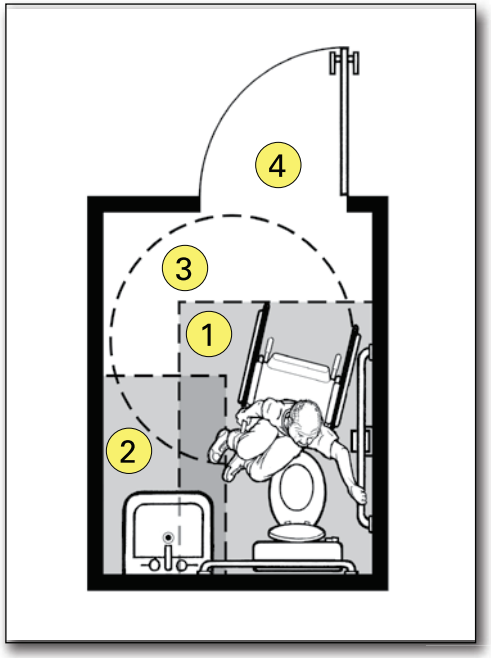

Notes:

1. 48-inch minimum by 66-inch minimum clear floor space for toilet
2. 48-inch minimum by 30-inch minimum clear floor space for lavatory
3. 60-inch minimum turning space
4. door swing

Plan view of a single-user toilet room showing the door swing not overlapping the dark toned area indicating the clear floor space for the toilet and lavatory. The door swing may overlap the turning space indicated by the circular area.

M10. Are the drain and hot water pipes for the lavatory insulated or otherwise configured to protect against contact? Yes _____ No _____
[ADA Standards § 4.19.4]

M11. Does that lavatory have controls that operate easily with one hand, without tight grasping, pinching, or twisting of the wrist? Yes _____ No _____
[ADA Standards § 4.19.5]

Notes/Comments

M12. If a mirror is provided, is the bottom of the reflecting surface no higher than 40 inches above the floor or is a full length mirror provided?
[ADA Standards § 4.19.6]

Yes _____ No _____

M13. For each type of dispenser, receptacle, or equipment, is there clear floor space at least 30 inches wide x 48 inches long adjacent to the control or dispenser (positioned either parallel to the control or dispenser or in front of it)?
[ADA Standards §§ 4.23.7; 4.27.2; 4.2.5 and Fig 5; 4.2.6 and Fig 6]

Yes _____ No _____

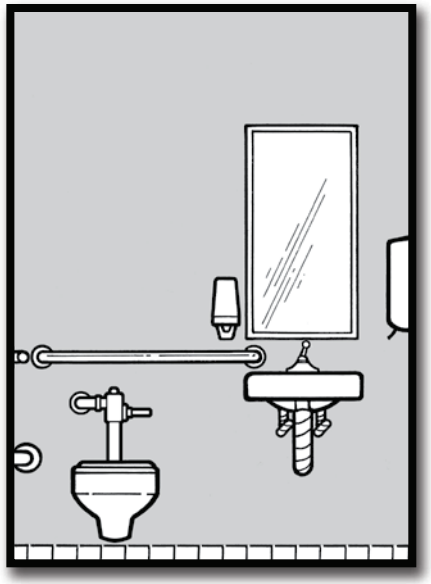

Front view of toilet, lavatory, mirror and soap dispenser

M14. Is the operating control (switch, lever, button, or pull) for each type of dispenser or built-in equipment no higher than 54 inches above the floor (if there is clear floor space for a parallel approach) or 48 inches (if there is clear floor space for a front approach)?
[ADA Standards § 4.23.7; 4.27.3; 4.27.2; 4.2.5 and Fig 5; 4.2.6 and Fig 6]

Yes _____ No _____

M15. Are all built-in dispensers, receptacles, or equipment mounted so the front does not extend more than 4 inches from the wall if the bottom edge is between 27 inches and 80 inches above the floor?
[ADA Standards §§ 4.23.7; 4.27; 4.4.1; Fig. 8]

Yes _____ No _____

M16. Is the centerline of the toilet 18 inches from the adjacent side wall?
[ADA Standards § 4.16.2; 4.17.3]

Yes _____ No _____

Notes/Comments

M17. Is the top of the toilet seat 17 to 19 inches above the floor? [ADA Standards § 4.16.3] Yes _____ No _____

M18. Is the flush valve located on the side adjacent to the lavatory? [ADA Standards § 4.16.5] Yes _____ No _____

M19. Is a horizontal grab bar at least 40 inches long securely mounted on the adjacent side wall 33 to 36 inches above the floor with one end no more than 12 inches from the back wall? [ADA Standards §§ 4.16.4; 4.17.6] Yes _____ No _____

M20. Is there a horizontal grab bar at least 36 inches long securely mounted behind the toilet 33 to 36 inches above the floor with one end no more than 6 inches from the side wall? [ADA Standards §§ 4.16.4; 4.17.6] Yes _____ No _____

M21. If a coat hook is provided, is it mounted no higher than 54 inches above the floor for a side approach or 48 inches above the floor for a front approach? [ADA Standards § 4.25.3] Yes _____ No _____

Notes/Comments

N. Health Units/Medical Care Areas

Notes/Comments

In many schools, where emergency shelters are often located, nurses' rooms or other types of health care facilities may be provided. These health care facilities should be on an accessible route and have accessible features, including an accessible entrance, an accessible route to the different types of services offered within the medical care unit, turning and maneuvering spaces, and cots or beds that are at a height to which people who use mobility devices can easily transfer.

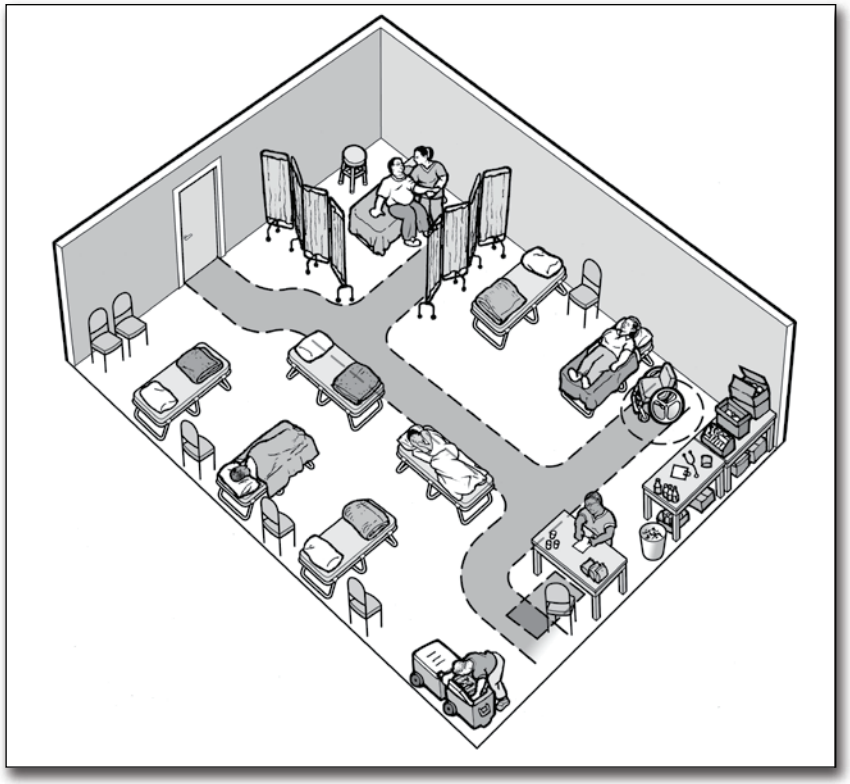

An overhead view of a medical care area with a shaded pathway showing the accessible route shown and clear floor spaces.

N1. Is there an accessible route, at least 36 inches wide, that connects each of the shelter activity areas with the health units and medical care areas (it may narrow to 32 inches wide for up to 2 feet in length)? [ADA Standards § 4.3.2(3)] Yes _____ No _____

O. Accessible Portable Toilets

Portable toilets are often used at emergency shelters to supplement permanent toilet facilities. When portable toilets are provided, at least one must be a unit with accessible features that is located on an accessible route connecting it with the shelter. For the entrance to an accessible portable toilet to be usable, there must either be no step or a ramp must be installed that extends extends from the hinge side of the door to at least 18 inches beyond the latch side of the door.

Accessible portable toilets should similar features to a standard accessible toilet stall including an accessible door, side and rear grab bar, clear space next to the toilet, and maneuvering space.

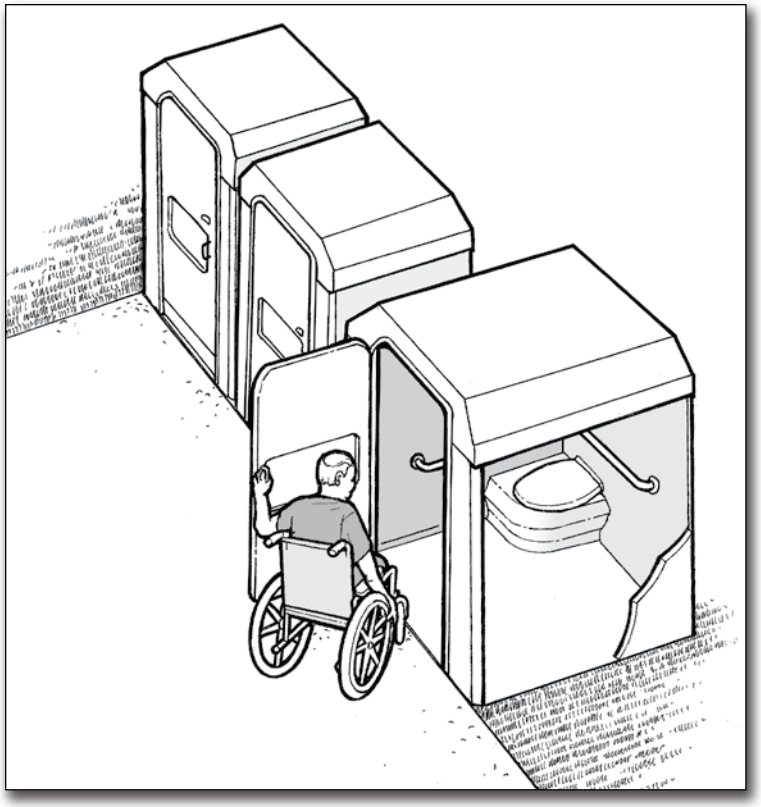

A person using a wheelchair enters an accessible portable toilet. The unit is positioned to provide a flush entry from the accessible route.

Appendix 2

FORM: Contact Information for Shelter Services Providers

This is a small sample of the services you should have in place prior to an emergency or disaster

Services for Persons Requiring FNSS	Account Number	Vendor Name	Address	Telephone
Communications Providers				
Interpreters (Spanish, sign language, etc.)				
Television with Captioning				
Information Technology/ Computer Services				
TTY – TDD				
Computer Assisted Real time Translation (CART)				
Note Taking				
Medical Staffing Services				
Onsite Nursing Services				
Emergency Medical Services				
Mental Health Services				
Emergency Dental Services				
Pharmaceutical Services				
Resource Suppliers				
O2				
Dialysis				
Constant Power Source				
Blood Sugar Monitoring				

Food Services				
Special Diets				
Caterer				
Personal Assistance Services				
Transportation Services				
Para transit Services				
Public Transportation				
Service Animals				
Emergency Veterinary Services				
Shelter Maintenance Services				
Servicing for Accessible Portable Toilets, Hand Washing Units, etc.				
Disposal of Bio-hazard Materials				
FNSS Equipment				
Durable Medical Equipment				

Appendix 3

Durable Medical Supply Sample List

DME (for children and adults)		
Equipment	**Quantity**	**Type**
3 in 1 Commode for over toilet use (300 lb capacity)	5	Each
Assorted utensil holder	8	Each
Accessible Cots	100	Each
Beds, bariatric, on wheels, up to 600 lbs	6	Each
Bedside Commodes (3ea-w/300 lb capacity; 2ea-w/450 lb capacity)	5	Each
Canes, quad (6ea-small base; 2ea-large base; 2ea-bariatric)	5	Each
Canes, white	3	Each
Comfort box (1ea knit pant, 1ea t-shirt, 1ea pair socks, hygiene items)	10	Box
Crutches, adult	3	Pair
Crutches, pediatric	3	Pair
Dressing aid sticks	5	Each
Handheld Shower w/84” hose	4	Each
Independent Toilet Seats w/safety bars	4	Each
IV Pole 5 Castor	3	Each
Patient Lift w/2 mesh slings (450 lb cap) (Hoyer lift)	2	Each
Privacy Screen, 3 panel w/castors	10	Each
Refrigerator, counter height, no freezer (for meds)	2	Each
Sheets, flat, fitted for bariatric bed (200 thread count or higher)	6	Each
Shower Chair w/back rest (4ea-400 lb capacity; 2ea-Bariatric)	6	Each
Egg Crate Padding -10 beds and 6 wheelchairs	10/6	Each
Walker, dual release (4ea-standard w/wheels; 2ea-heavy duty w/wheels; 2ea-bariatric w/out wheels; 2ea-standard w/out wheels)	10	Each
Medical Cot w/mattress & half side rails	4	Each
Wheelchair ramps, portable (1ea-10’; 1ea -6’)	2	Each
Wheelchair transfer boards	8	Each
Wheelchairs, adult (7ea-w/footrests; 3ea-w/elevating leg rest)	4	Each
Wheelchairs, adult, extra large (to 450 lb capacity; 1ea-w/footrest; 1ea-w/elevating leg rest)	2	Each
Wheelchairs, pediatric (1ea-w/footrest; 1ea-w/leg rest)	2	Each

Appendix 4

Consumable Medical Supply Sample List

CMS (for children and adults)			
Note 1: Planning estimate is based on 100 person shelter population for one week			
Note 2: All liquid items must meet TSA standard (3.4 oz or less) in case of aerial evacuation			
Item	**Description**	**Quantity**	**Notes**
Antibacterial Wipes/ Towelettes	40 pack	100	
Bag, plastic	13 gallon	100	
Nutritional Supplemental Drinks for Kids/Children (over 12 months of age), ready to drink (i.e.,Pedia-sure)	dispensed by medical authority in shelter	28-120 fl. oz. per day in no larger than 8 oz bottles / 196 - 658 per week	
Magnifying Glasses (standard)		2	
Paper Cup Lids	for 12 oz cups	1 case	
Bendable Drinking Straws		1 case	
Duct Tape		12 rolls	
Waterproofing Pads (i.e. CHUX)	standard size	10 boxes of 24	
Patient Care Gloves, non-latex	disposable	6 boxes	
Non-latex Cleaning Gloves	disposable	4 boxes of 100	
Bio-hazard Bags	for medical bio-waste	1 box of 24	
Bleach, chlorine		2 gallons	
Bucket, 2.5 gallon		10 each	
Paper Towels		20 rolls	
Hand Sanitizer		6 each large	
Hand Sanitizer		100 each individual	
Baggies (large/small)		10 boxes each	
Instant Ice	pkg of	12	Self-contained, break to use
Instant Heat	pkg of	12	Self-contained, break to use

Emesis Basin (shallow)	each	12	Plastic 8.5”
Bedpans	each	2 disposable w/o cover	Resistant to stains and cracks. 350-pound weight capacity. Contoured design molded plastic for adults.
Bedpans	each	10 disposable w/o cover	Resistant to stains and cracks. Dimensions: 14” L x 11” W x 2.5”D. Weight capacity: 250 pounds.
Urinals - male	each	8 disposable w/cover	Plastic, disposable male urinal with cover - translucent
Distilled Water (for humidifiers)	gallon	10	
Nutrition drink for diabetics (i.e. Glucerna)	each	48 (8 oz bottles)	Plastic bottle contains ingredients that contribute to blood glucose management and support cardiovascular health. For people with diabetes. For the use as a supplement, snack, or meal as a part of a diabetes management plan.
Nutrition Drink (i.e. Ensure)	each	48 (8 oz. reclosable bottle)	Source of concentrated calories and is high in protein to help patients gain or maintain healthy weight. It is a complete and balanced oral nutritional supplement that can be used with or between meals or, in appropriate amounts, as a meal replacement.
Trach Care Tray	each	2	W-Forceps. Sterile, single-use. Compact and disposable. All necessary components for care and cleaning of trach site. Tray includes removable basin, 2 latex-free gloves, trach brush, drape, 36” twill tape, 2 cotton tipped applicators, 2 pipe cleaners and 4 4”x4” gauze and plastic forceps.
Scissors, blunt-end		2 each	
Scissors, sharp and curved		2 each	
Back Support	each	2	Universal back support fits a range of sizes. Wide, elastic support base. Overlapping elastic compression panels. Adjustable and removable shoulder straps.
Cervical Collar, universal size	each	4	Soft foam collar is slightly contoured for comfort. 1”-thick foam is covered with stockinet and has loop/lock closure. Universal style fits most. 2.5” wide at the chin, fits neck circumference 12-22”.
Automatic Blood Pressure Cuff, adult with batteries, x-large	each	2 with x-large adult cuff	Displays simultaneous readings of systolic and diastolic blood pressure and pulse
Automatic Blood Pressure Cuff, adult with batteries, standard	each	2 with standard cuff	Displays simultaneous readings of systolic and diastolic blood pressure and pulse

Auto Blood Pressure Cuff, child, with batteries	each	2 with child cuff	Displays simultaneous readings of systolic and diastolic blood pressure and pulse
Saline Solution (wound wash)	each	12	A sterile saline solution (0.9%) for flushing and cleansing superficial wounds
Pill Crusher		6 each	
Pill Cutter		6 each	
Diapers, adult	x-large	3 cases of 20	
Diapers, adult	large	3 cases of 20	
Diapers, adult	medium	3 cases of 20	
Diapers, adult	small	3 cases of 20	
Pull-Up Adult Diapers	small	1 cases of 20	
Saniwipe Disinfectant Towels		2 pkgs	Textured cloth for a rigorous disinfection in the most stringent medical environments and continuous exposure to bodily fluids and blood
Sterile Gauze Sponges 4”x4”		2 boxes of 100	100 % cotton sponges of fine mesh gauze for wound debriding, prepping, packing, dressing, and general wound care
Sterile Gauze Sponges 2”x2”		2 boxes of 50	100 % cotton sponges of fine mesh gauze for wound debriding, prepping, packing, dressing, and general wound care
ABDs	sterile wound gauze pads (not the blue pads)	1 case (approx 200)	ABD Pad Sterile 8”x10”. Soft, non-woven layer for patient comfort and fluff filler for absorbency. All four edges are sealed to prevent lint residue and leaking. Sterile, in single peel back sleeve.
Ace Bandages (2”)	rolls	2 boxes	Economy Woven Elastic Bandage 2”x4.5yd. Clip Closure 1ea/bx 1ea/cs ETO Latex-free used for compression or securing of splints, dressings, and ice packs. Economy and standard REBs are standard grade woven bandages that offer balanced stretch and compression.
Ace Bandages (3”)	rolls	2 boxes	Economy Woven Elastic Bandage 3”x4.5yd. Clip Closure 1ea/bx 1ea/cs ETO Latex Free used for compression or securing of splints, dressings, and ice packs. Economy and standard REBs are standard grade woven bandages that offer balanced stretch and compression.
Ace Bandages (4”)	rolls	2 boxes	Economy Woven Elastic Bandage 4”x4.5yd. Clip Closure 1ea/bx 1ea/cs ETO Latex Free used for compression or securing of splints, dressings, and ice packs. Economy and standard REBs are standard grade woven bandages that offer balanced stretch and compression.

Ace Bandages (6”)	rolls	2 boxes	Economy Woven Elastic Bandage 6”x4.5yd. Clip Closure 1ea/bx 1ea/cs ETO Latex Free used for compression or securing of splints, dressings, and ice packs. Economy and standard REBs are standard grade woven bandages that offer balanced stretch and compression.
Application, cotton-tipped (6” long, 100 per box)		2 boxes	
Bandage Gauze Roll (2”)		6 dozen	Cover-roll bandage 2”x10yd.
Bandage Gauze Roll (4”)		6 dozen	Cover-roll bandage 4”x10yd.
Cotton Balls		4 bags of 50	100% cotton balls
Colostomy Appliance		2 packages	Dependant on manufacturer
Colostomy Wafers		2 boxes of 10	Individually wrapped size 4”x4” wafer with flange (skin protector)
Colostomy Paste		4 tubes (2 oz)	IB Ostomy Paste 2 Oz Tube. Pectin based, skin barrier paste helps protect the skin around stomas and fistulas to prevent skin irritation and to fill-in uneven skin surfaces.
Colostomy Skin Preps		1 box of 50 wipes	No-Sting Skin-prep Wipes. Forms protective film to prepare skin for tapes and adhesives.
Colostomy Ileostomy Bags (pouches)	11” drainable colostomy/ ileostomy bag (pouch)	1 boxes of 10	1 box of 10, cut to fit, drainable colostomy/ ileostomy pouch
TELFA Dressings, sterile		2 boxes	Absorbent cotton pad. Superior “Ouchless” TELFA dressing won’t disrupt healing tissue by sticking to wound. Each dressing individually wrapped in peel-open envelope. Ideal as primary dressing for lightly draining wounds. Bonded on both sides with perforated non-adherent film; can be cut to any shape without separating. Sterile. Size: 3”x4”.
General Antiseptic Cleansers (i.e., BZK Towelettes)		2 boxes of 100	BZK Towelettes 5”x 7”. Used for general antiseptic cleansing for patients and staff, each towelette is saturated with benzalkonium chloride 1:750. Contains no alcohol. Latex-free.
Alcohol Prep Pads		4 boxes of 100	100 pads per box
K-Y Jelly		4 tubes	large
Peroxide		4 bottles	16 oz
Betadine Scrub Solution		4 bottles	16 oz
Adhesive, non-allergic (1” paper tape)		6 each	1” x 11yds.

Adhesive, non-allergic (2” paper tape)		6 each	2” x 11yds.
Safety Pins		1 box	Nickel-plated steel. Each pin closed. Secure safety head. 1.75”. Box of 1440.
Medicine Cups		2 packages 100	1 oz
Hand Asepsis Towelettes		4 packages pk/160	antimicrobial hand wipe
Batteries – assorted		1 package each	AAA/AA/9 VOLT/C/D
Batteries - hearing aid		1 package each	assorted
Spray Bottle	plastic	4 each	6 oz
Blood Glucose Meter Kit		4	Allows for alternate site testing and stores up to 300 test results. Includes meter, carrying case, lancing device, 10 lancets, control solution normal, alternate site testing cap.
Test Strips, diabetic		2 boxes of 50	50 strips per box
Velcro, double sided (loop and hook)	1”,2” and 4”	6 rolls (2 or each)	2 rolls ea of 1”, 2”, and 4”x 50yds.
Nebulizer		2	FIO (2) settings adjustable from 35% to 100%. It has ports for a feed set and an immersion-type heater. Capacity: ~350ml^.
Isolation Mask		1 box of 50	Fluid-resistant, polypropylene outer facing with ear loops
Foley Catheter		10 each	Cath Foley Sil 12Fr 5cc. An All Silicone Foley Catheter that is designed for enhanced comfort and elimination of concerns regarding potential health risks that may be associated with repeated exposure to latex devices.
Intermittent Catheter, male		25 each	Cath Intmt Rdrbr 8Fr 16”. All-purpose, urethral, X-ray opaque with funnel end and round, hollow tip. Two opposing eyes. Sterile. Size A: 16”^. Size B: 8Fr^.
Condom Catheters, male		25 each	Cath Exterior Tex Ltx 2-Pc W-Fm. With 5.5”L x .75”W foam strap.
Intermittent Catheter, female		25each	Intmt Pvc Pls Cath F 14 Fr 6.5”. Sterile. Clear polyvinyl chloride with matte finish, smooth rounded tip, funnel end. Size A: ~6.5”^. Size B: ~14 Fr^.
External Catheter, male		25 each	Cath Ext Tex Ltx 2-Pc W-Fm. With 5.5”L x .75”W foam strap.

Spray Adhesive, medical		5 cans	Medical Adhesive Spray 3.2 oz. Increases the adhesion to skin for pouches, wound drainage collectors and fecal incontinence systems.
Removal Wipes		1 box of 50	Universal adhesive remover for tapes, adhesives, and hydrocolloid skin barriers.
Leg Bags, assorted sizes small/medium/large	500ml x 3 600ml x 3 950ml x 3	9 (3 of each)	T-Tap Leg Bag 500ml. Sterile. Secure, comfortable, soft vinyl bags, with flutter valve and Velcro strap. Latex-free. SizeA: ~500ml^. Style A:~With latex-free tubing and connector^. Sterility: Sterile^.
Cannulas Nasal Oxygen Tubes (disposable)		5 each	Nasal cannula, extra soft, curved tip, with 7 ft. (213 cm.) crush - resistant tubing.
Regulators, 02		2	Oxygen Regulator with overall length less than 4” and weighs just 6.9 oz. Lightweight aluminum body with brass sleeve and brass internals. Downward facing outlet port.
Bedside Drainage Collectors		3	2000cc drainage bag with drip chamber, sample port and universal hanging device.
Power Strips		5	6 ft. length
Battery Chargers, universal		2	For recharging wheelchair batteries and other battery-powered equipment.
Extension Cords		3	50 ft. length
T.E.D. Compression Stockings		1 each medium/ large/x-large	Support hose
Chemical-free Shampoo and Body Wash		2 (8 oz bottles)	Hypoallergenic cleanses - rinse free. Contains Aloe Vera Gel, no alcohol.
Chemical-free Spray Cleaner		2 (8 oz bottles)	Gentle cleanser contains Acemannan Hydrogel - No rinse, Non-irritating
Air Pump (bicycle type)		1	For wheelchair tires w/composite head fitting. Presta, Schrader, and Woods/Dunlop valves without switching internal parts.

Appendix 5

Guidance for Providing Personal Assistance Services

Guidance on Planning for Personal Assistance Services in General Population Shelters

FEMA

Guidance on Planning for Personal Assistance Services in General Population Shelters

Goal

Present guidance to State, local, and tribal governments regarding the need to provide Personal Assistance Services (PAS) in general population shelters for children and adults with and without disabilities who have access and functional needs.

Personal Assistance Services (PAS) are services that enable children and adults to maintain their usual level of independence in a general population shelter.

Objectives

Present guidance on:

- Defining " sufficiency of services"
- Minimizing risk and exposure to litigation
- Identifying resources necessary to provide PAS to children and adults who require them
- Planning considerations for assisting children and adults requiring PAS
- Utilizing volunteers and leveraging existing systems that provide PAS

Guidance on Planning for Personal Assistance Services in General Population Shelters

Contents

Page	Section
133	1. Acronyms
133	2. Purpose
133	3. Disclaimer
134	4. Scope
134	5. Premise
135	6. Definition
137	7. Legal Foundation for PAS Guidance
140	7.1. Legal Authorities and References
141	8. PAS Guidance
142	8.1. Introduction
142	8.2. Sufficiency of Care
142	8.3. Jurisdictional Variances
145	9. Providing PAS during an Emergency or Disaster
145	9.1. Leveraging Services
145	9.1.1. Identifying Existing Community Resources
147	9.1.2. Recruiting, Orienting, and Training PAS Providers
148	9.1.3. Providing PAS Resources and Supplies
151	10. Glossary
152	11. Operational Tools

Guidance on Planning for Personal Assistance Services in General Population Shelters

1. Acronyms

AED	Automated External Defibrillator
ADA	Americans with Disabilities Act
CIL	Center for Independent Living
CART	Computer Assisted Real time Translations
CBO	Community-Based Organization
CMS	Consumable Medical Supplies
DME	Durable Medical Equipment
EOC	Emergency Operations Center
FEMA	Federal Emergency Management Agency
FNSS	Functional Needs Support Services
PAS	Personal Assistance Services
TDD	Telecommunications Device for the Deaf
TTY	Teletypewriter
VOAD	Voluntary Organizations Active in Disasters

2. Purpose:

The purpose of this document is to provide guidance to emergency managers and shelter planners for the development of Personal Assistance Services (PAS) for children and adults with and without disabilities who have access and functional needs and require PAS to maintain their usual level of independence in a general population shelter. These guidelines, based on Federal law directives, identify methods of achieving a lawful and equitable program.

3. Disclaimer:

This document provides guidance to assist emergency managers and shelter planners in understanding the requirements related to providing PAS to children and adults who require them in general population shelters. It is not intended to establish new legal obligations, alter existing obligations, or constitute a legal interpretation of the statutes that are the basis of the guidance materials.

Listing of an agency's or organization's processes/procedures as an operational tool in this guidance does not constitute a recommendation or endorsement of the resource. In addition, information presented in an operational tool may have been summarized, modified, and/or combined with other cited sources.

This PAS Guidance is an appendix of the Guidance on Planning for Integration of Functional Needs Support Services in General Population Shelters and should be used in conjunction with that document.

4. Scope:

This document is intended to provide guidance regarding the PAS necessary to meet Federal requirements of integrating children and adults with and without disabilities who have access and functional needs into every aspect of emergency planning and response. It is intended to be used in conjunction with general population shelter standard operating procedures to ensure that all shelter residents benefit equally from programs, services, and activities. It provides a context for providing PAS in light of other existing plans and describes a process to use in any planning effort. These guidelines are scalable and can be applied to urban, suburban, and rural localities with multiple or limited resources.

The PAS guidance recognizes that many jurisdictions across the country operate general population shelters and many have already developed emergency operations plans; however, the PAS Guidance is designed to help both novice and experienced emergency managers and shelter planners ensure inclusion of people with disabilities and/or access and functional needs.

Children and adults with and without disabilities who have access and functional needs and require PAS have the same right to services in general population shelters as other residents. Emergency managers and shelter planners have the responsibility to plan for shelter services and facilities that are accessible.

5. Premise:

Every day, Americans provide extraordinary levels of assistance to individuals of all ages and situations. Formal and informal PAS are provided in virtually every community to enable children and adults with and without disabilities who have access and functional needs to maintain their independence and fully participate in all aspects of home and community life.

Historically, gaps have existed in planning for and meeting the need for PAS in general population shelters. This has resulted in disparate treatment and the denial of full and equal services. This guidance is provided to ensure that children and adults with disabilities and/or access and functional needs are no longer turned away from general population shelters and inappropriately placed in special needs or medical shelters. Addressing these gaps benefits the entire community and maximizes resources.

6. Definition:

Personal Assistance Services (PAS) are formal and informal services provided by paid personnel, personal attendants, friends, family members, and volunteers that enable children and adults to maintain their usual level of independence in a general population shelter. These services (when necessary) may include, but are not limited to, assisting with:

- Basic personal care:
  - Grooming
  - Eating
  - Bathing
  - Toileting
  - Dressing and undressing
  - Walking
  - Transferring
  - Maintaining health and safety

- Activities of daily living:
  - Taking medications
  - Shopping for groceries
  - Communicating
  - Accessing programs and services

The Operational Tools in this document are excerpts and examples taken from agency and jurisdictional documents throughout the United States. While they are not meant to dictate a State's policies or procedures, they do present ideas and practices that can be adapted to fit each State's specific needs.

Operational Tool #1 Personal Assistance Services	
Definition of PAS	**Personal Assistance Services** – Also known as personal attendant services, attendant care services, and personal care services (PCS) – These services include "people or devices that assist a person with a physical, sensory, mental, or learning disability with tasks that the person would perform for himself or herself if he or she did not have a disability." It includes a range of assistance provided to persons with disabilities and chronic conditions, which enables them to accomplish tasks that they would normally do for themselves if they did not have a disability. PAS are provided to people of all ages to help with Activities of Daily Living (ADLs), such as grooming, eating, bathing, dressing and undressing, toileting, or Instrumental Activities of Daily Living (IADLs), such as taking medications, shopping for groceries, communicating, and accessing programs and services. PAS are generally classified into two categories: • Informal (unpaid) services provided by family members, friends, and neighbors • Formal services that are paid either directly out-of-pocket, or by public payers, private insurance, or other sources
Source	Center for Personal Assistance Services, University of California, San Francisco, Cal.; http://www.pascenter.org

7. Legal Foundation For PAS Guidance

The Stafford Act and Post-Katrina Emergency Management Reform Act (PKEMRA), along with Federal civil rights laws, mandate integration and equal opportunity for people with disabilities in general population shelters.

To comply with Federal law, those involved in emergency management and shelter planning should understand the concepts of accessibility and nondiscrimination and how they apply in emergencies. Following are key nondiscrimination concepts applicable under Federal laws, and examples of how these concepts apply to all phases of emergency management.

1. Self-Determination – People with disabilities are the most knowledgeable about their own needs.
2. No "One-Size-Fits-All" – People with disabilities do not all require the same assistance and do not all have the same needs.
   - Different types of disabilities affect people in different ways. Preparations should be made for individuals with a variety of functional needs, including individuals who use mobility aids, require medication or portable medical equipment, use service animals, need information in alternate formats, or rely on a personal attendants.
3. Equal Opportunity – People with disabilities must have the same opportunities to benefit from emergency programs, services, and activities as people without disabilities.
   - Emergency recovery services and programs should be designed to provide equivalent choices for people with disabilities as they do for individuals without disabilities. This includes choices relating to short-term housing or other short-term and long-term disaster support services.
4. Inclusion – People with disabilities have the right to participate in and receive the benefits of emergency programs, services, and activities provided by governments, private businesses, and nonprofit organizations.
   - Inclusion of people with various types of disabilities in planning, training, and evaluation of programs and services will ensure that all people are given appropriate consideration during emergencies.
5. Integration – Emergency programs, services, and activities typically must be provided in an integrated setting.
   - The provision of services such as sheltering, information intake for disaster services, and short-term housing in integrated settings keeps individuals connected to their support system and personal attendants and avoids the need for disparate service facilities.
6. Physical Access – Emergency programs, services, and activities must be provided at locations that all people can access, including people with disabilities.
   - People with disabilities should be able to enter and use emergency facilities, and access the provided programs, services, and activities. Facilities typically required to be accessible include: parking, drop-off areas, entrances and exits, security screening areas, toilet rooms, bathing facilities, sleeping areas, dining facilities, areas where medical care or human services are provided, and paths of travel to and from and between these areas.

7. Equal Access – People with disabilities must be able to access and benefit from emergency programs, services, and activities equal to the general population.
    - Equal access applies to emergency preparedness, notification of emergencies, evacuation, transportation, communication, shelter, distribution of supplies, food, first aid, medical care, housing, and application for and distribution of benefits.
8. Effective Communication – People with disabilities must be given information that is comparable in content and detail to that given to the general public, as well as accessible, understandable, and timely.
    - Auxiliary aids and services may be needed to ensure effective communication. These may include pen and paper or sign language interpreters through on-site or video and interpreting for individuals who are deaf, deaf-blind, hard of hearing, or have speech disabilities. Individuals who are blind, deaf-blind, have low vision, or have learning disabilities may need large print information or assistance with reading and filling out forms.
9. Program Modifications – People with disabilities must have equal access to emergency programs and services, which may entail modifications to rules, policies, practices, and procedures.
    - Service staff may need to change the way questions are asked, provide reader assistance to complete forms, or provide assistance in a more accessible location.
10. No Charge – People with disabilities may not be charged to cover the costs of measures necessary to ensure equal access and nondiscriminatory treatment.
    - Examples of accommodations provided without charge to the individual may include: ramps; cots modified to address disability-related needs; a visual alarm; grab bars; additional storage space for mobility aids and other equipment; lowered counters or shelves; Braille and raised letter signage; a sign language interpreter; a message board; assistance in completing forms and providing documents in Braille; large print or audio recording.

See FEMA's Non-discrimination Principles of the Law:
http://www.fema.gov/oer/reference/principles.shtm

The Americans with Disabilities Act of 1990 (ADA), the Rehabilitation Act of 1973 (RA), and the Fair Housing Act (FHA), their regulations and agency guidance, as well as State counterparts, among others, define the scope of FNSS. These hallmarks of equal opportunity for people with disabilities include:

- The implementation and execution of a general policy of nondiscrimination on the basis of disability
- Sheltering persons with disabilities in the most integrated setting appropriate to the needs of the individual, which is the same setting people without disabilities enjoy in almost every case
- Reasonable modifications of policies, practices, and procedures to ensure nondiscrimination, with reasonableness judged in light of nondiscrimination principles applied in emergent circumstances
- The provision of auxiliary aids and services to ensure effective communication, with primary consideration of the aid or service given to the individual with a disability
- Elimination of eligibility criteria, discriminatory administrative methods, paternalistic safety requirements, and surcharges where discrimination results
- The selection of accessible sites for the location of general population emergency shelters, the construction of architecturally-compliant mass care shelters and elements, and required physical modifications to ensure program accessibility in existing facilities

The U.S. Department of Justice has provided guidance to State and local governments advising that **people with disabilities should be housed in mass care shelters even if they are not accompanied by their personal care aides.** "Some people with disabilities use personal care assistance for activities of daily living, such as eating, dressing, routine health care, and personal hygiene needs. One question that frequently arises is whether people with disabilities who use attendant care can be appropriately housed in mass care shelters. In most instances, they can. Most people with disabilities who use attendant care are not medically fragile and do not require the heightened level of medical care provided in a special needs or medical shelter.

In the past, some shelter operators maintained policies that prevented people with disabilities who regularly use attendant care from entering mass care shelters unless they were accompanied by their own personal care attendants. These policies denied access to many people with disabilities.

During emergencies, many personal care attendants – like other people – evacuate or shelter with their own families instead of staying with their clients. Shelter operators should provide support services in mass care shelters to accommodate people with disabilities who are not medically fragile but need some assistance with daily living activities unless doing so would impose an undue financial and administrative burden. Such assistance can be provided by medical personnel or trained volunteers."[1]

[1] http://www.ada.gov/pcatoolkit/chap7shelterprog.htm

7.1. Legal Authorities and References

ADA Best Practices Tool Kit for State and Local Governments, Chapter 7, Emergency Management under Title II of the ADA (2007), Addenda 1-3, and the Introduction to Appendices 1 and 2 (Attached as Exhibit 1); Titles II, III, and V of the Americans with Disabilities Act of 1990, 42 U.S.C. §§ 12101-12103, 12131-12134, 12181-12188, and 12201-12213, as amended by the ADA Amendments Act of 2008. Nondiscrimination on the Basis of Disability in State and Local Government Services, 28 C.F.R. pt. 35. Nondiscrimination on the Basis of Disability by Public Accommodations and in Commercial Facilities, 28 C.F.R. pt. 36. The Americans with Disabilities Act Title II Technical Assistance Manual (1993) and Supplement (1994). The Americans with Disabilities Act Title III Technical Assistance Manual (1993) and Supplement (1994).

Section 504 of the Rehabilitation Act of 1973, 29 U.S.C. §§ 794, as amended. Enforcement of Nondiscrimination on the Basis of Handicap in Programs or Activities Conducted by the Federal Emergency Management Agency, 44 C.F.R. pt. 16. Enforcement of Nondiscrimination on the Basis of Handicap in Programs or Activities Conducted by the Department of Justice, 28 C.F.R. pt. 39. Nondiscrimination on the Basis of Handicap in Programs or Activities Receiving Federal Financial Assistance, 45 C.F.R. pt. 84 (Department of Health and Human Services). Nondiscrimination on the Basis of Handicap in Programs or Activities Receiving Federal Financial Assistance, 34 C.F.R. pt. 104 (Department of Education). Nondiscrimination Based on Handicap in Federally Assisted Programs and Activities of the Department of Housing and Urban Development, 24 C.F.R. pt. 8.

Title VIII of the Civil Rights Act of 1968 ("Fair Housing Act"), as amended, 42 U.S.C. §§ 3601-3631. Discriminatory Conduct Under the Fair Housing Act, 24 C.F.R. pt. 100.

The Architectural Barriers Act of 1968, as amended, 42 U.S.C. §§ 4151-4157. Construction and Alteration of Public Buildings, 41 C.F.R. pt. 101-19.

The Homeland Security Act of 2002, 6 U.S.C. §§ 101-557, as amended.

The Robert T. Stafford Disaster Relief and Emergency Assistance Act, 42 U.S.C. §§ 5121-5206, as amended. Federal Disaster Assistance, 44 C.F.R. pt. 206.

The Post-Katrina Emergency Management Reform Act, 6 U.S.C. § 761(d), as amended

Emergency managers and shelter planners are encouraged to investigate their applicable State laws for additional requirements.

8. PAS Guidance

This document outlines common scenarios that general population shelter managers and operators may encounter during emergencies and disasters, and presents guidance to emergency managers and shelter planners on providing Personal Assistance Services (PAS) so people who require these services may benefit from the sheltering program. In most instances, PAS have not been provided in general population shelters up to this point. Clarification of legal obligations, recognition of the need to plan for all members of the community, and favorable outcomes resulting from implementation of best practices have all supported the benefits of planning for the delivery of PAS in general population shelters. The guidance provided in this document suggests strategies to assist in planning for PAS. PAS is provided in virtually every community on a daily basis. Consequently, resources to plan for shelter-based PAS are readily available locally.

The Operational Tools in this document are excerpts and examples taken from agency and jurisdictional documents throughout the United States. While they are not meant to dictate a State's policies or procedures, they do present ideas that can be adapted to fit each State's specific needs.

Throughout this document "State" is used to refer to a U.S. State or U.S. territory.

8.1. Introduction

Historically, PAS for children and adults with disabilities have not been provided in general population shelters. During disasters, children and adults with and without disabilities who have access and functional needs have been re-directed to "special needs" or medical shelters. In some instances, the only shelters that would admit people with disabilities have been remotely located and have caused children and adults who required PAS to be separated from their families, friends, or personal attendants.

To help address the lack of PAS in general population shelters, this guidance has been developed to assist emergency managers and shelter planners in establishing plans to address the provision of PAS to children and adults who require these services in order to maintain their independence.

Emergency managers and shelter planners need to include information in their State's emergency response plan related to identifying, developing, and providing PAS in general population shelters.

8.2. Sufficiency of Care

General population shelters should be prepared to provide sufficiency of care for all residents. These services include PAS. As with other shelter services, it is imperative that plans to provide PAS are in place prior to an emergency or disaster.

Because PAS are offered in virtually every community, emergency managers and shelter planners can begin planning for these services at the local level by involving people who routinely use and provide these services. (Reference Leveraging Services below). In many instances, the individuals and/or agencies that are experienced PAS providers will be willing and able to continue providing those services in a shelter setting. However, should these services be unavailable, the State should plan to use volunteers and/or paid providers to ensure a sufficiency of care when PAS is needed.

8.3. Jurisdictional Variances

State codes and standards must, at a minimum, meet Federal requirements, but can be more comprehensive. The ADA and other Federal laws, including the Stafford Act, the Rehabilitation Act, the Fair Housing Act, and the Architectural Barriers Act, provide affirmative obligations and prohibitions of discrimination on the basis of disability. No State or local government, or its contractors, in providing services may, by law, policy or contract, provide services below those standards without violating Federal law. This does not mean that a State or local government cannot enact laws and ordinances or provide services, obligations, and prohibitions that extend beyond these standards to ensure even greater access. A common example would be to provide twice as many as the required number of accessible parking spaces and access aisles.

Because each jurisdiction (State, local, and tribal) is different and the laws, rules, and regulations that apply to each State and community vary, there is no single national plan for providing PAS in general population shelters. Emergency managers and shelter planners should use existing information regarding the local laws, rules, regulations, and demographics of their State and/or community to develop a plan to provide PAS. At a minimum, the plan should consider and address:

- Existing information regarding the day-to-day utilization of PAS
- Service provider-to-shelter resident ratios based on projected need for PAS and availability of State and local resources to provide these services in a shelter setting
- The development of plans and agreements to utilize resources (e.g., DME and CMS) currently available to provide required PAS
- Potential gaps in current information regarding the need for PAS, including:
  - Transient populations such as migrant workers and tourists
  - Individuals who receive informal PAS from family and friends
  - Plans for providing PAS in regional evacuation areas where local PAS resources may be insufficient, destroyed, or damaged

Emergency managers and shelter planners need to include in their State plan, options for providing PAS outside the area where an emergency or disaster occurs in the event that it is not possible to shelter residents in their home community.

Operational Tool #2 Demographic Information – by State	
Sample of available information regarding the number of persons who have a disability or have difficulty performing self-care activities in California	1,109,000 persons (3.9%) of Californians have difficulty with self-care activities and/or other routine activities
Source	Center for Personal Assistance Services, University of California, San Francisco, Cal; http://www.pascenter.org Note: Click on Need for PAS; click on Disability Statistics

Operational Tool #3 Demographic Information – by county	
Sample of available information regarding the number of persons who have a disability or have difficulty performing self-care activities in Travis County, Texas	1.3% of the population ages 16 through 64 have a "self-care disability" and 2.2% have a "go outside disability." 12% of the population, ages 65 and above, have a "self-care disability" and 18.9% have a "go outside" disability." These percentages in either category should not be added together since people with a "self-care disability" are often a subset of the "go outside disability."
Source	Center for Personal Assistance Services, University of California, San Francisco, Cal.; http://www.pascenter.org Note: Click on Need for PAS; click on Disability Statistics; click on Disability Statistics; click on Disability Prevalence for Counties; click on Texas; click on Travis County

9. Providing PAS During an Emergency or Disaster

9.1. Leveraging Services

9.1.1. Identifying Existing Community Resources

Long before an emergency or disaster occurs, emergency managers and shelter planners should begin working closely with individuals in the community who require PAS. Emergency managers and shelter planners should also reach out to organizations and providers that routinely provide PAS to children and adults with disabilities. It is essential that appropriate PAS are available when needed in an emergency situation. Suggested Community-based Organizations (CBO) providing or advising on PAS on a regular basis include, but are not limited to:

- Center for Independent Living (CIL)
- Home health organizations
- Rehabilitation centers
- Home and community living organizations
- Respite providers
- Mental health organizations
- Developmental disability organizations
- Aging organizations
- Advocacy groups
- Protection and advocacy agencies
- The Salvation Army
- Faith-based organizations
- Colleges and universities
- Vocational service agencies
- Rehabilitation agencies
- American Red Cross
- Personnel from nursing homes and assisted living facilities
- Personnel from hospitals and health care systems

Operational Tool #4 Identifying PAS Resources	
Locating PAS	Assistance and advice on providing PAS is available from: • The National Council on Independent Living • Association of Programs for Rural Independent Living • Independent Living Research Utilization
Source	http://www.ncil.org 1710 Rhode Island Avenue Northwest/Fifth Floor Washington, D.C. 20036
Source	http://www.april-rural.org
Source	http://ilru.org/

Operational Tool #5 Identifying Community-based PAS	
Involvement and cooperation with local community-based organizations (CBOs)	• Identify and build relations with the CBOs already linked to local government through service contracts • Meet to discuss potential areas for CBOs involvement in care and shelter operations • Encourage CBOs to cooperatively use their resources (e.g., food, transportation, health/mental health services) to ensure that care and shelter services meet the PAS needs within the community • Determine the support that CBOs will need to keep services going during a disaster or emergency • Focus additional meetings around specific planning issues • Involve CBOs in disaster planning, training, and exercises sponsored by State and local governments • Support CBOs by: ◦ Giving them priority status for supplies or resources ◦ Having a CBO representative in the EOC ◦ Establishing a memorandum of understanding with selected CBOs ◦ Developing agreements with CBOs stipulating that the CBOs will make staff experienced in providing PAS as required during an emergency or disaster
Source	A Guide for Local Jurisdictions In Care and Shelter Planning, Alameda County Operational Area Emergency Management Organization, September 2003 http://www.cdsscounties.ca.gov/coplanners/res/pdf/doc16.pdf

9.1.2. Recruiting, Orienting, and Training PAS Providers

Emergency managers and shelter planners should include in their plans strategies to recruit, enroll, orient, and communicate with PAS providers.

Recruitment strategies can include:

- Utilizing existing PAS providers
- Publicizing the need for PAS providers in malls, universities, service club newsletters, State and local websites, and public services announcements
- Targeting individuals with interests and/or skills to provide PAS
- Implementing a simple process for volunteering

Enrollment strategies can include:

- Obtaining basic identifying information on providers
- Completing criminal background checks, when necessary

Orientation strategies can include:

- Defining PAS
- Stating what tasks PAS providers will be expected to perform
- Providing comprehensive information about how to:
  - Set-up exercises for PAS providers to practice the tasks they will be expected to perform
  - Develop a training curriculum that includes how to provide assistance in:
    - Basic personal care
      - Grooming
      - Eating
      - Bathing
      - Toileting
      - Dressing and undressing
      - Walking
      - Transferring
      - Medications, DME, and CMS
      - Maintaining health and safety
    - Effective communication
    - Accessing programs and services

Operational Tool #6 PAS Workers and Personal Attendants	
PAS Workforce Project	Presents information regarding PAS workers and personal attendants, including who they are, what they provide, and tools and support necessary to carry out their tasks
Source	Center for Personal Assistance Services; http://pascenter.org Note: Click on Workers and Caregivers

Implementing these or similar strategies will increase the likelihood that PAS providers will be available when they are needed and that they will be assigned appropriate PAS responsibilities during an emergency or disaster.

Operational Tool #7 Non-professionals Providing PAS	
Red Cross Family Caregiving	Includes information for non-professionals who are providing PAS including: • Home safety • Caregiving Skills • Body Mechanics • Personal Care • Healthy Eating • Caring for the Caregiver • Legal and Financial • Dementia • Caregiving Resources
Source	Be Red Cross Ready, American National Red Cross, Safety Series Vol.1, 2007; www.mississippi-redcross.org

Operational Tool #8 PAS Training	
Providing information, training, and experience to persons providing PAS	Prior to an emergency, plan how staff will be instructed in their roles and responsibilities during a disaster. Include in the training: • A definition of "emergency" • When an emergency plan will be implemented • Roles and responsibilities of essential and non-essential PAS providers • Procedures for educating clients about the preparedness plan • Information for PAS providers regarding how they can work with the local shelter management during an emergency
Source	Virginia Department of Health, Office of Licensure and Certification, Emergency Preparedness Planning for Hospice and Home Care Providers, Effective September 1, 2006 http://www.vdh.state.va.us/OLC/Laws/documents/HCO%20and%20HSP%20emergency%20prep.pdf

9.1.3. Providing PAS Resources and Supplies

In addition to identifying staff and volunteers to provide PAS, emergency managers and shelter planners should include in emergency plans, several options for pre-identifying resources and supplies that will be critical to assisting children and adults who require PAS. This includes DME, CMS, and the services that support the provision of PAS. At a minimum, plans should address:

- Processes for locating, purchasing, and storing as much of the DME and CMS as possible and practical to meet the needs of children and adults who require PAS
- Agreements with providers to ensure that necessary DME and CMS will be available during an emergency or disaster
- Agreements with communities to ensure that if one community is severely damaged or destroyed, necessary DME and CMS will be available
- Identifying and leveraging resources of assistive technology exchanges, lending, and reutilization programs

Operational Tool #9 Durable Medical Equipment (DME) List	
DME (for children and adults)	See the "Guidance on Planning for Integration of Functional Needs Support Services in General Population Shelters" for the Federally-approved DME list.
Source	FEMA: Guidance on Planning for Integration of Functional Needs Support Services in General Population Shelters; Appendix 3: Durable Medical Supply Sample List

Operational Tool #10 Consumable Medical Supplies (CMS) List	
CMS (for children and adults)	See the "Guidance on Planning for Integration of Functional Needs Support Services in General Population Shelters" for the Federally-approved CMS list.
Source	FEMA: Guidance on Planning for Integration of Functional Needs Support Services in General Population Shelter; Appendix 4: Consumable Medical Supply Sample List

Operational Tool #11 Communication Devices	
Communication Devices – not inclusive	• Sound amplification aids: TTY/TDD Phones • Computer/laptop with capability for video relay communication • Cap Tel Phones (for captioning) • Computer Assisted Real-time Translation • Hearing aid batteries of different sizes (including batteries for cochlear implants)
Source	Guidance on Planning and Responding to the Needs of People with Access and Functional Needs, California Emergency Management Agency, Office for Access and Functional Needs; http://www.calema.ca.gov/ Note: Click on Office for Access and Functional Needs
Source	BCFS: www.bcfs.net/fnssrecommendations

Operational Tool #12 Resource for Assistive Technology	
Reuse of assistive technology	There is at least one Federally funded program in every State that engages in the reuse of assistive technology. These programs are also connected to other entities in the State that reuse assistive technology so they can serve as a central point of contact for emergency managers and shelter planners.
Source	http://www.resnaprojects.org/nattap/at/statecontacts.html (contact information only)
Source	http://www.resnaprojects.org/nattap/at/statecontacts.html#al (contact information)

In addition to DME, CMS, and communication devices, emergency managers and shelter planners should ensure that the services necessary to support the provision of PAS are identified and consistently available.

Operational Tool #13 Legal Authority for PAS	
Legal Authority for PAS	Federal agencies may, on the direction of the president, provide assistance essential to meeting immediate threats to life and property resulting from a major disaster, including: • Medicine, durable medical equipment, goods, and other consumables • Emergency medical care; emergency mass care shelter; and provision of food, water, medicine, and durable medical equipment In any emergency, the president may assist State and local governments in the distribution of medicine, food, and other consumable supplies and emergency assistance. Federal authority for provision of PAS can be found in the reference below.
Source	Source Sections 403 (a)(2) and (3)(B) and 502(a)(7) of the Robert T. Stafford Disaster Relief and Emergency Assistance Act, 42 U.S.C. §§ 5121-5206, as amended. Federal Disaster Assistance, 44 C.F.R. pt. 206. http://www.fema.gov/about/stafact.shtm

During an emergency or disaster, some shelters may have no source of emergency power generation, while others may have only a limited source. Emergency managers and shelter planners should take whatever steps are necessary to plan for providing an alternate source of power in the event of an outage.

Many children and adults who require PAS depend on battery-powered assistive devices for mobility, including wheelchairs and scooters. The batteries in these mobility aids must frequently be recharged or they stop functioning. Without these mobility aids, children and adults with disabilities lose their ability to move independently. This may render them unable to participate in some services offered by the shelter and more dependent on assistance from others.

In addition, plans should include arrangements with multiple providers for an ongoing supply of oxygen and access to dialysis facilities. Not having these services available will result in a failure to provide residents sufficient care and may result in an unnecessary surge on medical facilities. Many people live independently and require very little assistance when they are able to access oxygen, dialysis, and other life sustaining aids and services.

Emergency managers and shelter planners should make arrangements for these services well before an emergency or disaster, and should include back-up plans in the event that primary providers cannot follow through as promised. DME and CMS may be available from a State, regional, FEMA, and/or HHS stockpile.

When a shelter does not have in place the provisions for necessary DME, CMS, and communication devices and services, operating a general population shelter that includes children and adults requiring PAS becomes much more difficult and seriously threatens the well being of shelter residents.

Every community will have residents and visitors needing PAS in a disaster. Planning to meet these needs in advance strengthens the ability of the community to meet the needs of its members and maximize limited resources.

10. Glossary

Cap Tel
A communication system that provides written captions of everything a caller says on a built-in display.

CART
Computer Assisted Real-time Translation

Consumable Medical Supplies (CMS)
Medical supplies (medications, diapers, bandages, etc.) that are ingested, injected, or applied and/or are one time use only

Durable Medical Equipment (DME)
Medical equipment (e.g., walkers, canes, wheelchairs) used by persons with a disability to maintain their usual level of independence

Sufficiency of care
The services that shelter residents, including children and adults with disabilities and/or access or functional needs, require in order to maintain a pre-disaster level of health and independence

TDD
Telecommunications Device for the Deaf

TTY
Teletypewriter

Universal/Accessible Cot
A Universal/Accessible cot that meets the following recommended criteria:

- Height 17”-19” without [below] the mattress(es)
- Width – minimum 27”
- Weight capacity – 350+ pounds
- Flexible head and feet position
- Rails, if any, must be positioned or moveable in such a way as to allow for wheelchair access. No IV pole.

11. Operational Tools*

Operational Tool #1	Personal Assistance Services
Operational Tool #2	Demographic Information – by State
Operational Tool #3	Demographic Information – by county
Operational Tool #4	Identifying PAS Resources
Operational Tool #5	Identifying Community-based PAS
Operational Tool #6	PAS Workers and Personal Attendants
Operational Tool #7	Non-professionals Providing PAS
Operational Tool #8	PAS Training
Operational Tool #9	Durable Medical Equipment (DME) List
Operational Tool #10	Consumable Medical Supplies (CMS) List
Operational Tool #11	Communication Devices
Operational Tool #12	Resource for Assistive Technology
Operational Tool #13	Legal Authority for PAS

* **Operational Tools** – The Operation Tools in this document are excerpts and examples taken from agency and jurisdictional documents throughout the United States. While they are not meant to dictate a State's policies or procedures, they do present ideas and practices that can be adapted to fit each State's specific needs.

Appendix 6

One Day Menu for General Population Shelters Providing Functional Needs Support Services

ONE DAY MENU					
One day menu	Regular	Diabetic	Reduced Sodium	Pureed	Infant
Breakfast	Orange Juice 6 oz Grits Scrambled Egg Bacon Biscuit/Margarine Coffee or Tea Milk skim or 2% 8oz	Orange juice 6 oz Grits Scrambled Egg Bacon Biscuit/Margarine Coffee or Tea Milk skim 8oz	Orange Juice 6 oz Grits Scrambled Egg – no salt when cooking Biscuit/Margarine Coffee or Tea Milk skim 8oz	Orange juice 6 oz Grits Scrambled Egg pureed Biscuit/Margarine pureed Coffee or Tea Milk skim 8oz	Formula and baby food
Lunch	Hamburger on bun Potato chips Peaches in juice Cookie Ketchup/Mustard Coffee or Tea Milk skim or 2% 8 oz	Hamburger on bun Potato chips Peaches in Juice Sugar free cookie Ketchup/Mustard Coffee or Tea Milk skim 8 oz	Hamburger (no salt when cooking) on bun Potato chips Peaches in juice Cookie Ketchup Coffee or Tea Milk skim 8 oz	Hamburger on bun pureed Mashed potatoes Peaches in juice pureed Cookie pureed Ketchup/Mustard Coffee or Tea Milk skim 8 oz	Formula and baby food
Dinner	Turkey and Gravy Dressing Carrots Pears in juice Bread 2 slices Margarine Coffee or Tea Milk skim or 2% 8 oz	Turkey and Gravy Dressing Carrots Pears in juice Bread 2 slices Margarine Coffee or Tea Milk skim 8 oz	Turkey and low sodium gravy Dressing Carrots Pears in juice Bread 2 slices Margarine Coffee or Tea Milk skim 8 oz	Turkey and gravy pureed Dressing pureed Carrots pureed Pears in juice pureed Bread 2 slices Margarine Coffee or Tea Milk skim 8 oz	Formula and baby food
Source	BCFS; www.bcfs.net/fnssrecommendations				

Appendix 7

FORM: Resident Health Care Information

RESIDENT'S HEALTH CARE RECORD

Name of Resident: _____

Assigned Resident #:	**DOB:**	**Sex:**

Date	Time	Complaint	Treatment

© 2010 BCFS

Appendix 8

FORM: Medication Administration Record

MEDICATION ADMINISTRATION RECORD

Name of Guest: _____

Shelter: _____ **DOB:** _____

Allergies: _____

Date	Time	Medication	Dosage	Route	Nurse's Initials

Printed Nurse's Name: _____ Initials _____

Printed Nurse's Name: _____ Initials _____

Printed Nurse's Name: _____ Initials _____

© 2010 BCFS

Appendix 9

FORM: Transportation Request Information

TRANSPORTATION REQUEST FORM

Date request: _____ Time: _____

Name of Requester: _____

Name of Resident needing transportation: _____

Assigned Resident #: _____

Additional Family Members to be Transported: _____

_____

_____

_____

Address of Pick Up Location: _____

Purpose of the Trip: _____ Medical Need _____ Return Home _____ Other

Name of Destination: _____

Contact at the Discharge Destination: _____

Contact Phone Number: _____

Any special equipment or transportation (wheelchair van, stretcher, etc.) needed for persons listed above:

_____

Luggage to be transported if at discharge: _____

Date and Time for pick up: _____

Date and Time for return to shelter if applicable: _____

Transportation arranged: _____ Yes _____ No

If no, explain: _____

Requester Notified of Action on Request: _____ Yes _____ No

Date and Time of Notification: _____

Notified by Whom: _____

© 2010 BCFS

Appendix 10

FORM: Resident Discharge Information

DISCHARGE FORM

Staff Information

Shelter Name: _____ Date: _____

Name of Person Filling out Form: _____

Personal Information

Last Name: _____ First Name: _____

Resident ID: _____ Address: _____

Phone No: _____

Caregiver Name (if applicable): _____

Relationship: _____ Phone No: _____

Number of Individuals discharged with guest: _____

List Individuals discharged with guest:

Name	Resident ID	Relationship

Destination

- ☐ Home
- ☐ Nursing facility
- ☐ Hospital
- ☐ Hotel
- ☐ Apartment
- ☐ Friend
- ☐ Family
- ☐ Caregiver
- ☐ Shelter
- ☐ Retirement Facility
- ☐ Hospice

Other: _____

Name of Destination Facility: _____

Address: _____ Phone No: _____

Email: _____ Fax No: _____

Alternate Point of Contact: (Name & Phone #): _____

PLEASE CONTINUE FILLING OUT THE FORM ON THE BACK

© 2010 BCFS

Transportation Needs

☐ Car ☐ Bus ☐ Accessible Vehicle ☐ Ambulance

Other: _____

Discharge Checklist

☐ Electricity to area

☐ Guest is physically able to make the trip

☐ Roads clear to destination

Equipment and Supplies Returned with Guest:

☐ Medication ☐ Equipment ☐ Personal Items

Medication/ Equipment:

_____

_____

_____

Forwarding Address of Resident:

_____

_____

_____

Additional Comments:

_____

_____

_____

_____

GUEST SIGNATURE: _____

DATE: _____ **TIME:** _____

© 2010 BCFS